21-1

Charge air pressure system with turbocharger

Notes:

- *Observe rules for cleanliness ⇒ Page 21-40 .*
- *When performing repairs, replace seals, gaskets, self-locking nuts and bolts which have a specified tightening angle.*
- *Secure all hose connections with the correct hose clips (same as original equipment)*

⇒ Parts catalog

- *Before carrying out tests or repair work, make sure that all lines and hoses are securely connected and that there are no leaks.*
- *Tightening torque for screw clamps: 2 Nm.*

21-2

Safety precautions

Note the following points if test equipment has to be used during a road test:

If test and measuring instruments are operated from front passenger's seat and the vehicle is involved in an accident, there is a possibility that the person sitting in this seat may receive serious injuries when the airbag is triggered.

21-3

WARNING!

- ***To avoid any risk of accident, observe the following precautions when using test instruments while road testing the vehicle:***

Audi TT Coupe:

- ***Use only VAS 5051 or VAG 1551 to read measured value blocks. The tester must always be secured on the rear seat and operated from the rear seat by a second person.***

- ***Due to the limited space, slide the front passenger's seat forward as far as it will go and (without pulling the release lever) incline the backrest as far forward as possible by turning the adjuster knob. Do not operate the release lever to tilt the backrest forward.***

Audi TT Roadster:

- ***In the Audi TT Roadster, use only VAG 1552.***

- ***Switch off the front passenger's airbag by means of the key-operated switch in the glove box***

- ***Reactivate front passenger's airbag after testing has been completed.***

21-4

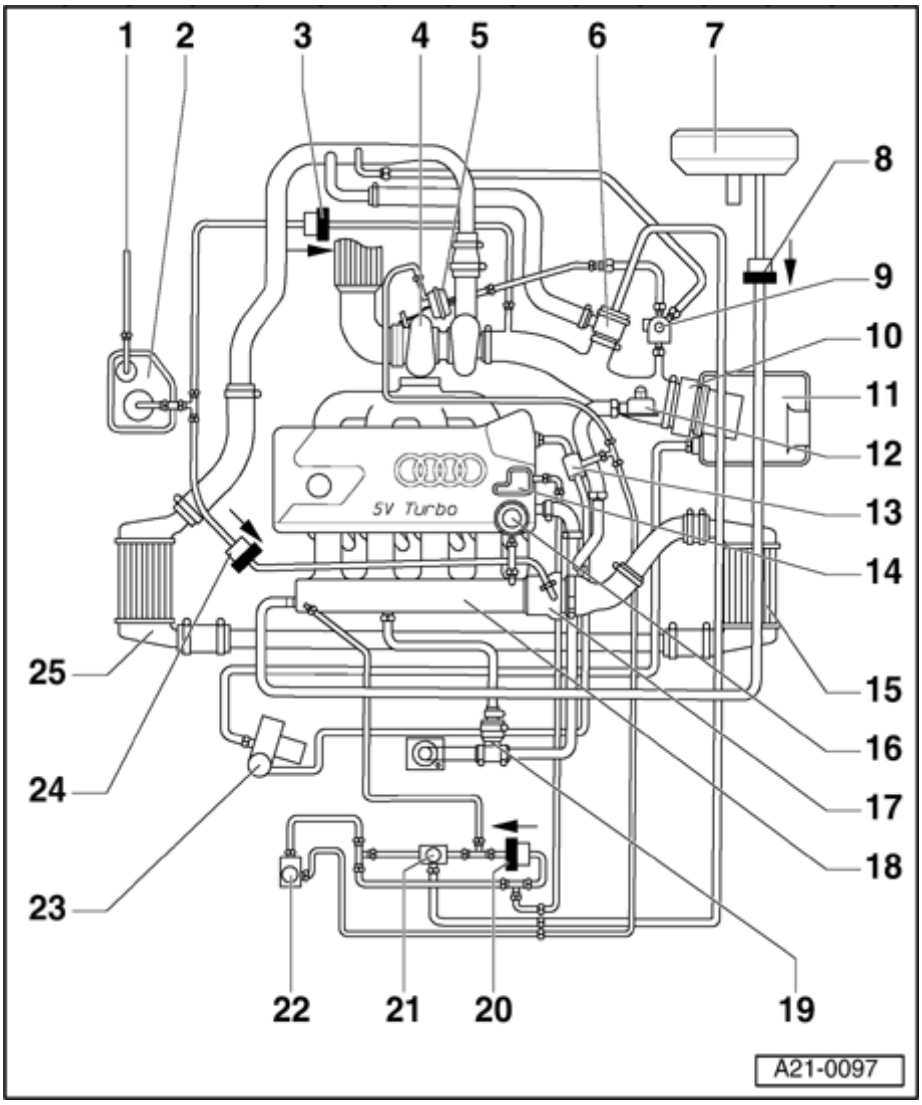

Diagram of connections for charge air press control system a vacuum system

1 - From fuel tar

2 - Activated charcoal filte

- With ACF solenoid va 1 (-N80-)

3 - Non-return valve for AC

- Between activa charcoal filter a intake pipe upstream of turbocharge
  - Install with and dark si in the positi shown in th illustration. Arrow point direction of flow.

4 - Turbocharge

- Testing cha air pressure Page 21-16

21-5

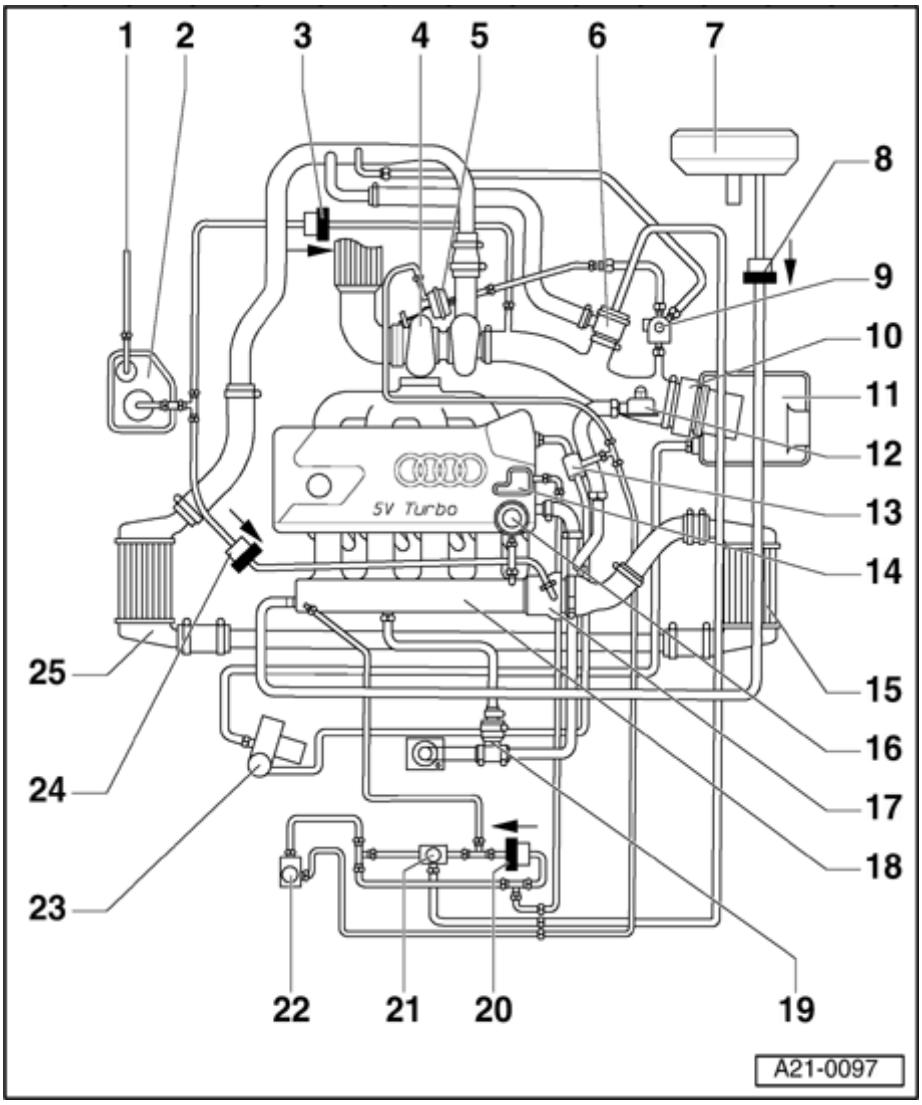

5 - Pressure unit for charge air pressure control

6 - Charge air pressure bypass valve

- Testing ⇒ Page 21-8

7 - Brake servo

8 - Non-return valve

- Between brake servo and intake manifold

- Install with light and dark sides in the positions shown in the illustration. Arrow points in direction of flow.

9 - Solenoid valve for charge air pressure control - N75-

10 - Air mass meter - G70-

21-6

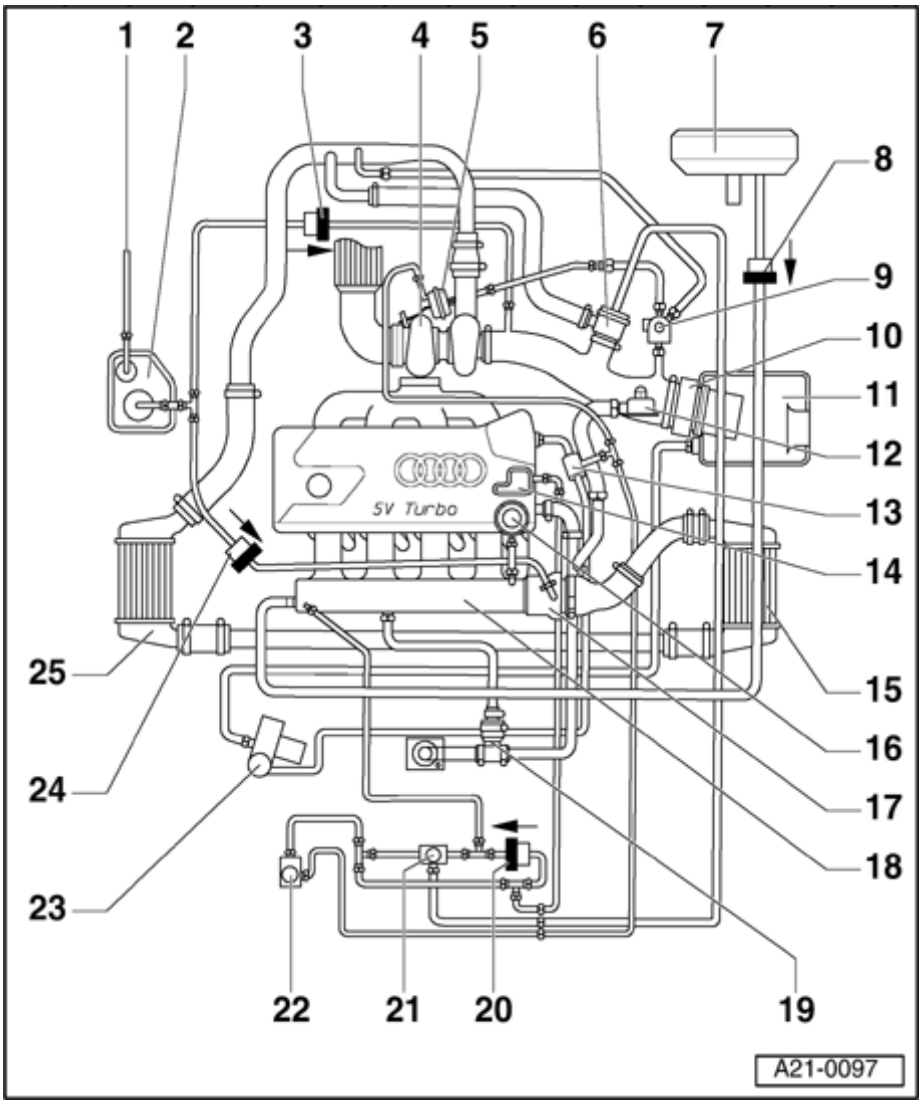

11 - Air cleaner

12 Crankcase - breather pressure regulating valve

13 Mechanical - secondary air valve

14 - Vacuum reservoir

- Bolted to cylinder head cover

15 - Charge air cooler

- With charge air pressure sensor - G31-

16 - Fuel pressure regulator

17 - Throttle valve control module - J338-

18 - Intake manifold

- With intake air temperature sender - G42-

19 Crankcase - breather

20 - Non-return valve

- Install with light and dark sides in the positions shown in the illustration. Arrow points in direction of flow.

21-7

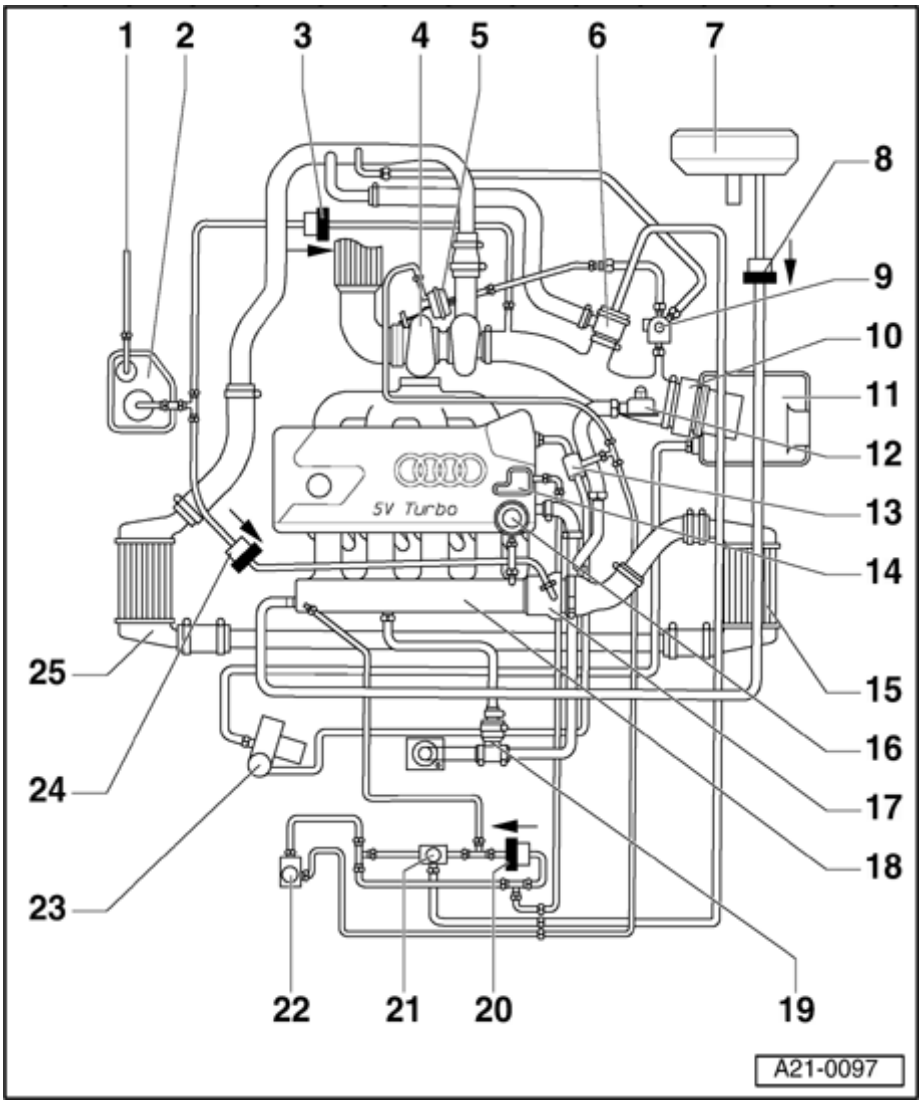

21 Air recirculatio - valve for
turbocharg -N249-

- Testing ⇒ 21-10

22 - Secondary a inlet valve -N

23 - Secondary a pump motor V101-

24 - Non-return v

- Between activated charcoal filt and intake manifold
- Install with and dark si in the positi shown in th illustration. Arrow point direction of

25 - Charge air cooler

21-8

Charge air pressure bypass valve, testing

Notes:

- *The charge air pressure bypass valve is upstream of the turbocharger. It i opened by vacuum from the electrically operated air recirculation valve for turbocharger (-N249-) when the e is on overrun or under part load or when This disperses the pressurized air (char pressure) upstream of the throttle valve, thus keeps the turbocharger rotat higher speed.*

- *Check the air recirculation valve if the er not producing full power, or jerking wher throttle is opened and closed.*

Special tools, testers and auxiliary items

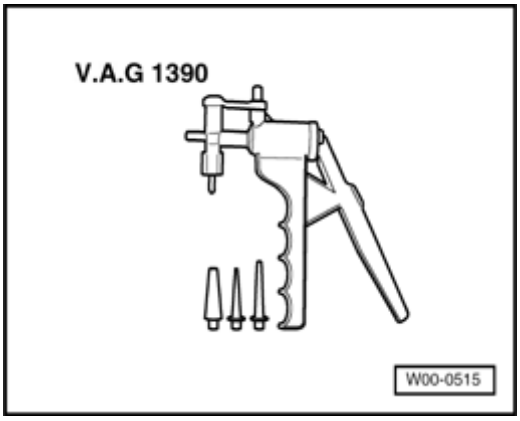

- VAG 1390

21-9

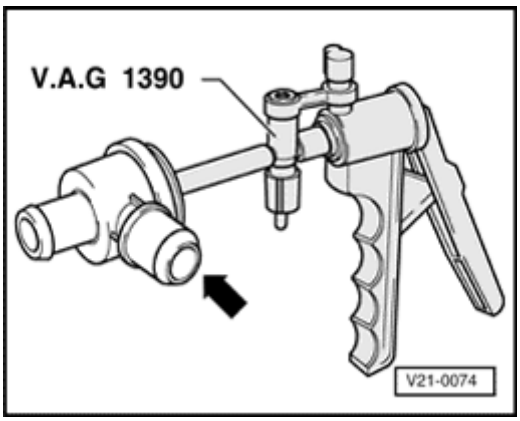

Test sequence

- Connect vacuum pump VAG 1390 to charge air pressure bypass valve.
- Operate vacuum pump.
  - ♦ Charge air pressure bypass valve should open -arrow-.
- Operate air vent valve on vacuum pump after about 30 seconds.
  - ♦ Charge air pressure bypass valve should close -arrow-.

If the charge air pressure bypass valve does not open and close as specified, or if the valve plate does not seal properly when the valve is closed:

- Replace the charge air pressure bypass valve. Secure the connections on the valve with screw-type clips.

21-10

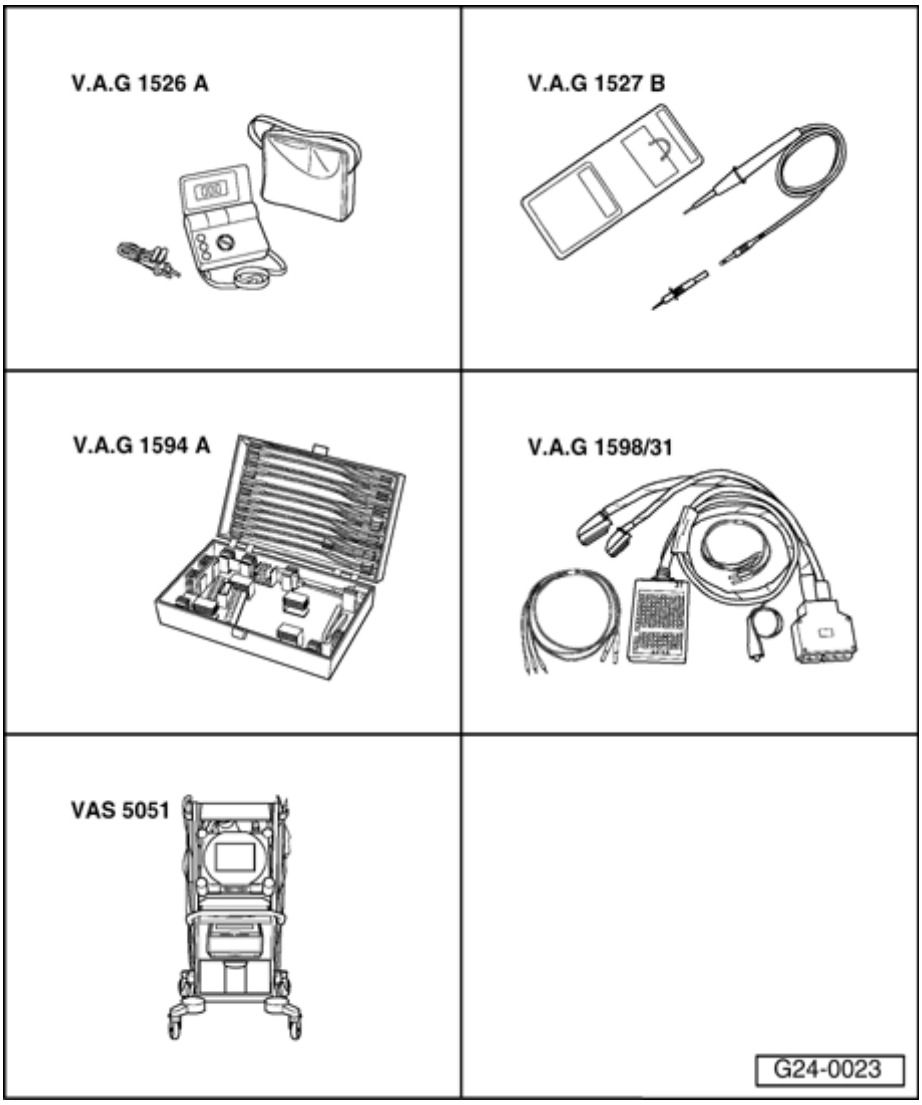

Air recirculation valve for turbocharger -N249-, testing

Special tools, test and other equipm required

- VAG 1526 A
- VAG 1527 B
- VAG 1594 A
- VAG 1598/31
- VAS 5051 with VAS 5051/1

- or

- VAG 1551 with VAG 1551/3 A

21-11

Note:

Air recirculation valve for ⇦ turbocharger ⇨ - N249- and its wiring are monitored by the engine control unit.

- Connect vehicle diagnostic, testing and information system VAS 5051 (or fault reader VAG 1551) and select engine electronics control unit by entering "Address word" 01. When doing this the engine must be running at idling speed.

⇒ *Repair Manual , 1.8 Liter 4-Cyl. 5V Turbo Fuel Injection & Ignition, Engine Code(s): AMU, Repair Group 01; On Board Diagnostic; Connecting VAS 5051 tester or VAG 1551 scan tool and selecting function*

- Interrogate DTC memory of engine control unit.

⇒ *Repair Manual , 1.8 Liter 4-Cyl. 5V Turbo Fuel Injection & Ignition, Engine Code(s): AMU, Repair Group 01; checking and erasing DTC memory*

If the display shows a DTC relating to air recirculation valve for ⇦ turbocharger ⇨ -N249- :

- Disconnect hoses from valve but leave the electrical connector plugged in.

- Install an auxiliary hose to one of the connections on the valve.

21-12

- Start Output Diagnostic Test Mode and air recirculation valve for ⇦ turbocharg N249-.

⇒ *Repair Manual , 1.8 Liter 4-Cyl. 5V Tur Injection & Ignition, Engine Code(s): AMU Repair Group 01; Output Diagnostic Test*

Output Diagnostic Test Mode →

Air recirculation valve for ⇦ turbocharger ⇨ -N249-

Indicated on display:

The valve should click...

...and should open and close (test by b into auxiliary hose).

Valve does not click:

- Test internal resistance of valve.

If the valve does not open and close prop

- Replace air recirculation valve for ⇦ turbocharger ⇨ -N249-.

Testing internal resistance

- Unplug connector from valve.

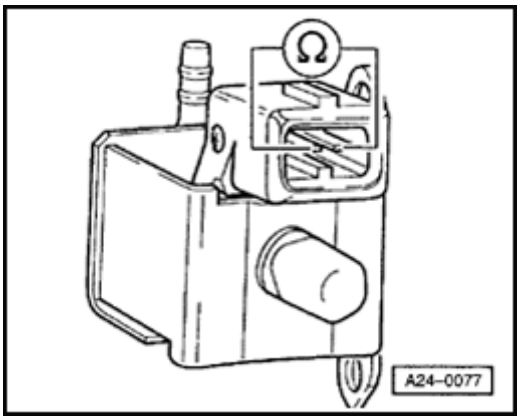

- Connect multimeter to valve (resistance measurement range)
  - Specification: 27-30 Ω

If the specification is not attained:

- Replace air recirculation valve for ⇦ turbocharger ⇨ -N249-.

21-13

If the specification is attained:

- Check voltage supply.

Checking voltage supply

Note:

The air recirculation valve receives its power supply via the fuel pump relay.

Test requirement:

- Fuse for air recirculation valve must be OK.

- Disconnect connector from valve.

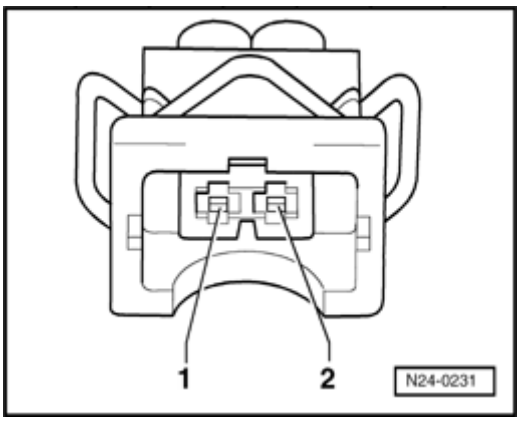

- Connect voltage tester VAG 1527 B as follows:

Connector Contact	Measure against
1	Engine Ground

- Operate starter briefly.
  - ♦ The LED should light up.

21-14

If the LED does not light up:

- Test for open circuit in wiring from contac fuel pump relay via fuse.

⇒ *Electrical Wiring Diagrams Troubleshoot Component Locations*

- Rectify any open circuits.

If the wiring is OK:

- Test fuel pump relay.

⇒ *Repair Manual , 1.8 Liter 4-Cyl. 5V Turbo Injection & Ignition, Engine Code(s): AMU, Repair Group 24; Servicing Motronic injecti system; Testing fuel pump relay -J17- and activation*

If the LED lights up:

- Test activation.

Checking activation

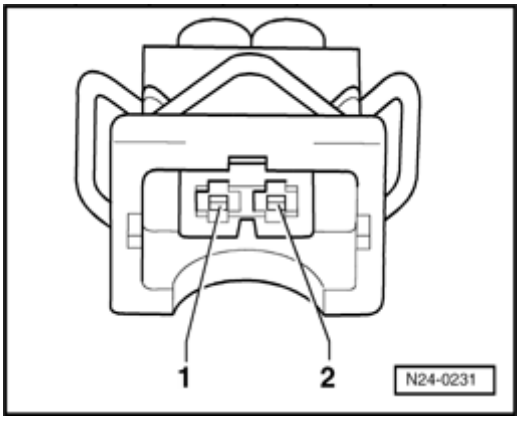

- Connect voltage tester VAG 1527 B to co (positive) and contact 2 of the connector.
- Start Output Diagnostic Test Mode and a air recirculation valve for turbocharge N249-.

⇒ *Repair Manual , 1.8 Liter 4-Cyl. 5V Turbo Injection & Ignition, Engine Code(s): AMU, Group 01; Output Diagnostic Test Mode*

- The LED should flash.

21-15

If the LED lamp does not flash or lights up continuously:

- Connect test box VAG 1598/31 to wiring harness for engine control unit. Do not cc the engine control unit itself.

⇒ *Repair Manual , 1.8 Liter 4-Cyl. 5V Turbc Injection & Ignition, Engine Code(s): AMU, Repair Group 24; Servicing Motronic injecti system; Wiring and component test using te box VAG 1598/31*

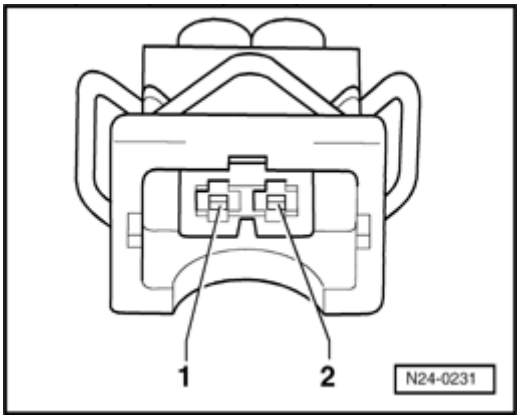

- Test for open circuit and short to positive Ground in the following wiring connectior

Connector Contact	Test box VAG 1598/31 Contact
2	105

- Rectify short circuit or open circuit if nece

If the wiring is OK:

- Replace engine control unit.

⇒ *Repair Manual , 1.8 Liter 4-Cyl. 5V Turbc Injection & Ignition, Engine Code(s): AMU, Group 24; Servicing Motronic injection syste Replacing engine control unit*

21-16

Turbocharger and wastegate bypass regulator valve, testing

Special tools, testers and auxiliary items

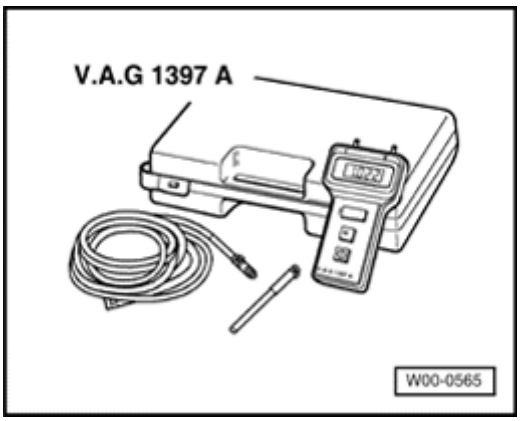

- VAG 1397 A

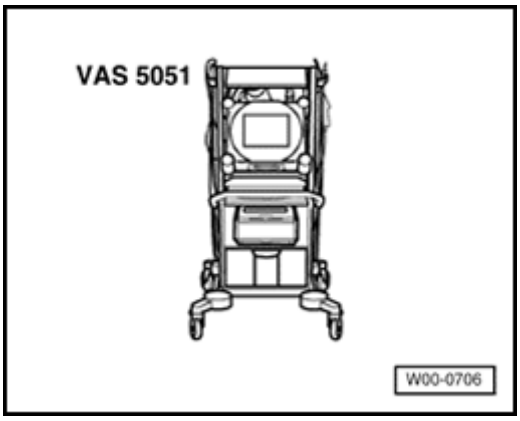

- VAS 5051 with VAS 5051/1

  or

- Malfunction reader VAG 1551 with VAG 1551/3 A

21-17

Requirements for test:

- All hoses and lines must be securely fitted and free of leaks.
- DTC memory has been interrogated

⇒ *Repair Manual , 1.8 Liter 4-Cyl. 5V Turbo Fuel Injection & Ignition, Engine Code(s): AMU, Repair Group 01; checking and erasing DTC memory*

- Output Diagnostic Test Mode has been performed

⇒ *Repair Manual , 1.8 Liter 4-Cyl. 5V Turbo Fuel Injection & Ignition, Engine Code(s): AMU, Repair Group 01; Output Diagnostic Test Mode*

- Vehicle diagnostic, testing and information system VAS 5051 or malfunction reader VAG 1551 must be connected.

Test sequence

WARNING!

To avoid any risk of accident, observe the safety precautions when using test instruments while road testing the vehicle ⇒ ***Page 21-2*** **.**

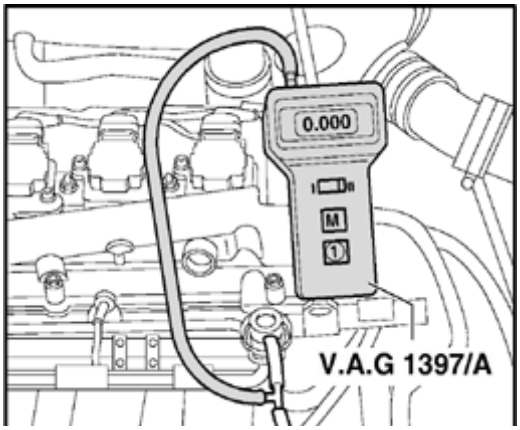

- Connect T-piece and measuring hose of ⇦ turbocharger ⇨ tester VAG 1397 A to intake manifold (front).
- Route measuring hose under rear edge of hood and into passenger compartment via right-hand window.

21-18

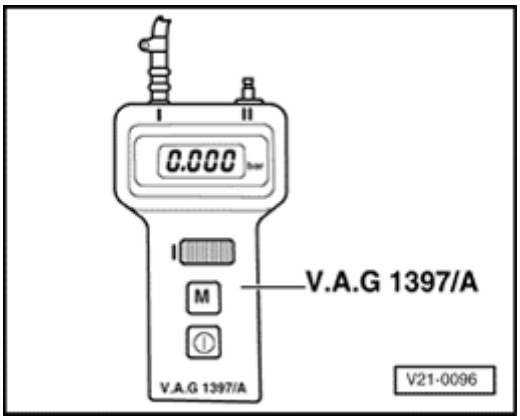

- Switch on ⇦ turbocharger ⇨ tester and set measuring range selector switch to position -I- (absolute pressure).
- Connect measuring hose to connection -I-.

Notes:

- *Hose connections must be completely airtight, otherwise measurements will not be correct.*
- *Ensure that measuring hose is not pinched at hood or side window.*
- *Pressing memory key M on ⇦ turbocharger ⇨ tester will store the last measured value until memory key M is pressed again or tester is switched off.*
- *The decimal point in the display flashes to indicate that the value is being stored.*
- *If the battery voltage of the ⇦ turbocharger ⇨ tester drops below the minimum level, an arrow will appear at the top left of the display.*
- *Before performing the test, drive the vehicle at a brisk speed for at least 3 km (without stopping at traffic lights etc.).*
- *A second mechanic is required to note the readings on the tester when the vehicle is moving.*

21-19

Rapid data transfer **HELP**

Select function XX

Indicated on display:

- Enter "08" to select the function "Read measured value block" and confirm entry with Q key.

Read measuredvalue block **Q**

Enter display group number XXX

Indicated on display:

- Enter "004" to select Display Group 004 and confirm entry with Q key.

Read measured value block 4 →

1 2 3 4

Indicated on display:

Do not proceed with the test until the intake air temperature shown in display zone 4 is between 20 and 50 °C. If necessary, run the engine until the required temperature is reached.

- Press C key.

Read measuredvalue block **Q**

Enter display group number XXX

Indicated on display:

- Enter "115" to select Display Group 115 and confirm entry with Q key.

Read measured value block 115 →

1 2 3 4

Indicated on display: (1-4 = display zones)

- Accelerate the vehicle from 2000 RPM in 4th gear and observe the rev counter.
- When the engine speed reaches 3000 RPM, press the "PRINT" key on VAS 5051 (or VAG 1551) and at the same time press the memory key "M" on VAG 1397 A.

21-20

Note:

The charge air pressure should be measured using turbocharger tester VAG 1397/A. Vehicle diagnostic, testing and information system VAS 5051 (or malfunction reader VAG 1551) is used to check whether the charge pressure is being registered by the control unit.

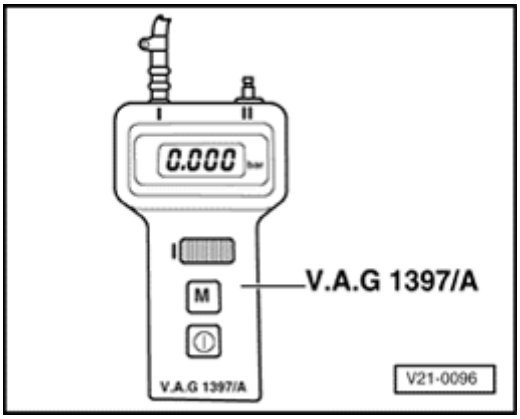

- Specification on VAG 1397 A: 1.700 - 2.000 bar

Read measured value block 115 →

3000 RPM 42% 1770 mbar 1770 mbar

- Specification on VAS 5051 or VAG 1551

  Display zone 4: 1700 - 2000 mbar

If specification not attained or exceeded:

- Interrogate DTC memory of engine control unit.

⇒ *Repair Manual , 1.8 Liter 4-Cyl. 5V Turbo Fuel Injection & Ignition, Engine Code(s): AMU, Repair Group 01; checking and erasing DTC memory*

21-21

Malfunctions in charge air pressure control function

Malfunction	Charge air pressure	Possible cause of malfunction
Charge air pressure too low	• Measured value less than 1.700 bar or 1700 mbar	♦ Wastegate bypass regulator valve -N75- defective ♦ Fault in wiring to Wastegate bypass regulator valve ♦ Wastegate bypass regulator valve in ⇦ turbocharger ⇨ is sticking in the "open" position ♦ Leak between ⇦ turbocharger ⇨ and intake manifold ♦ Charge pressure bypass valve defective ♦ ⇦ Turbocharger ⇨ defective
Charge air pressure too high [1]	• Measured value higher than 2.000 bar or 2000 mbar	♦ Pressure unit for Wastegate bypass regulator valve defective ♦ Air leaks in hoses or connections to pressure unit for charge air pressure control (via -N75-) ♦ Wastegate bypass regulator valve in ⇦ turbocharger ⇨ sticking in closed position

[1] If the charge air pressure is too high the fuel supply will be interrupted in order to protect the engine. This results in misfiring at high engine speeds.

21-22

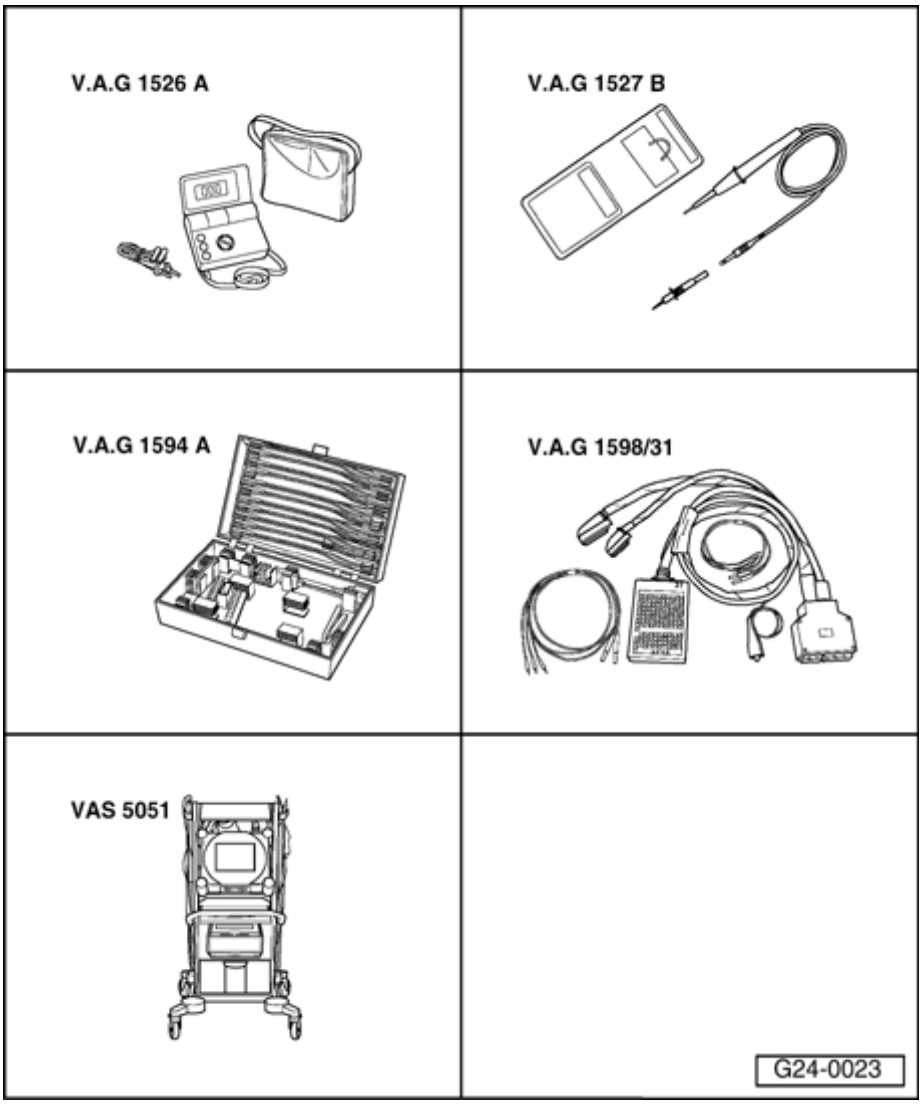

Wastegate bypass regulator valve -N75-, testing

Special tools, testers and other equipment required

- VAG 1526 A
- VAG 1527 B
- VAG 1594 A
- VAG 1598/31
- VAS 5051 with VAS 5051/1

- or

- VAG 1551 with VAG 1551/3 A

21-23

Note:

Wastegate bypass regulator valve -N75- and its wiring are monitored by the engine control unit.

- Connect vehicle diagnostic, testing and information system VAS 5051 (or malfunction reader VAG 1551) and select engine electronics control unit by entering "Address word" 01. When doing this the engine must be running at idling speed.

⇒ *Repair Manual , 1.8 Liter 4-Cyl. 5V Turbo Fuel Injection & Ignition, Engine Code(s): AMU, Repair Group 01; On Board Diagnostic of Motronic system; Connecting VAS 5051 tester or VAG 1551 scan tool and selecting functions*

- Interrogate DTC memory of engine control unit.

⇒ *Repair Manual , 1.8 Liter 4-Cyl. 5V Turbo Fuel Injection & Ignition, Engine Code(s): AMU, Repair Group 01; checking and erasing DTC memory*

If the display shows a DTC relating to Wastegate bypass regulator valve -N75-:

- Disconnect hoses from valve but leave the electrical connector connected.

- Install an auxiliary hose to one of the connections on the valve.

21-24

- Start Output Diagnostic Test Mode and a Wastegate bypass regulator valve -N75.

⇒ *Repair Manual , 1.8 Liter 4-Cyl. 5V Turbo Injection & Ignition, Engine Code(s): AMU, Repair Group 01; Output Diagnostic Test M*

Output Diagnostic Test Mode →

Charge air pressure control solenoid valve -N75-

Indicated on display:

The valve should click...

...and should open and close (test by blo into auxiliary hose).

Valve does not click:

- Test internal resistance of valve.

If the valve does not open and close proper

- Replace charge pressure control solenoi -N75-.

Testing internal resistance

- Disconnect electrical connector from valv

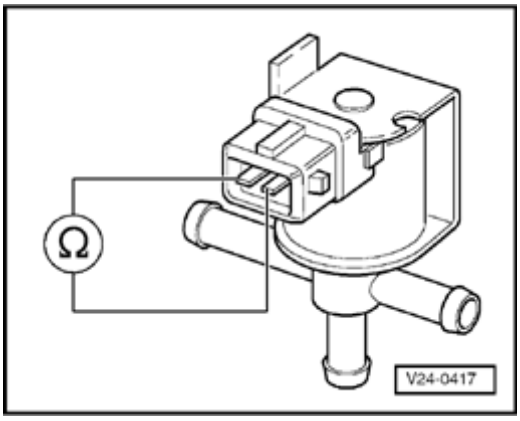

- Connect multimeter to valve (resistance measurement range)
  - Specification: 25 - 35 Ω

21-25

If the specification is not attained:

- Replace charge pressure control solenoi
  -N75.

If the specification is obtained:

Testing voltage supply

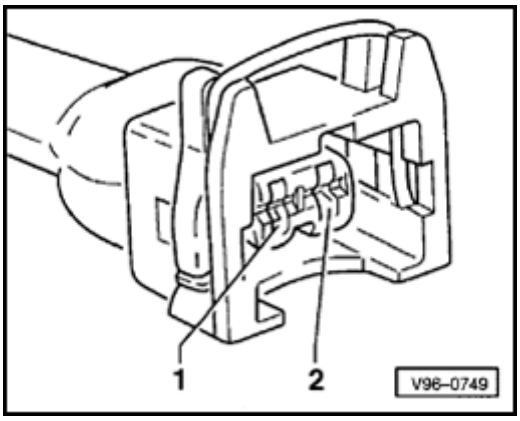

- Connect voltage tester VAG 1527 B as fo

Connector Contact	Measure against
1	Engine Ground

- Operate starter briefly.
  - ♦ The LED should light up.

If the LED does not light up:

- Test for open circuit in wiring from contac
  fuel pump relay via fuse.

⇒ *Electrical Wiring Diagrams, Troubleshoo*
Component locations

- Rectify any open circuits.

21-26

If the wiring is OK:

- Test fuel pump relay.

⇒ *Repair Manual , 1.8 Liter 4-Cyl. 5V Turbo Fuel Injection & Ignition, Engine Code(s): AMU, Repair Group 24; Servicing Motronic injection system; Testing fuel pump relay - J17- and activation*

If the LED lights up:

Checking activation

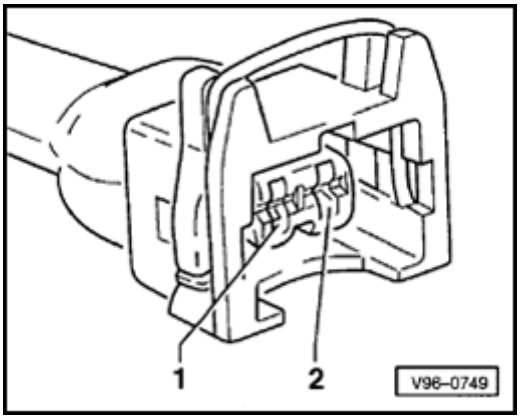

- Connect voltage tester VAG 1527 B to contact 1 (positive) and contact 2 of the connector.
- Start Output Diagnostic Test Mode and activate Wastegate bypass regulator valve -N75-.

⇒ *Repair Manual , 1.8 Liter 4-Cyl. 5V Turbo Fuel Injection & Ignition, Engine Code(s): AMU, Repair Group 01; Output Diagnostic Test Mode*

♦ The LED should flash.

If the LED lamp does not flash or lights up continuously:

- Connect test box VAG 1598/31 to wiring harness for engine control unit. Do not connect the engine control unit itself.

⇒ *Repair Manual , 1.8 Liter 4-Cyl. 5V Turbo Fuel Injection & Ignition, Engine Code(s): AMU, Repair Group 24; Servicing Motronic injection system; Wiring and component test using test box VAG 1598/31*

21-27

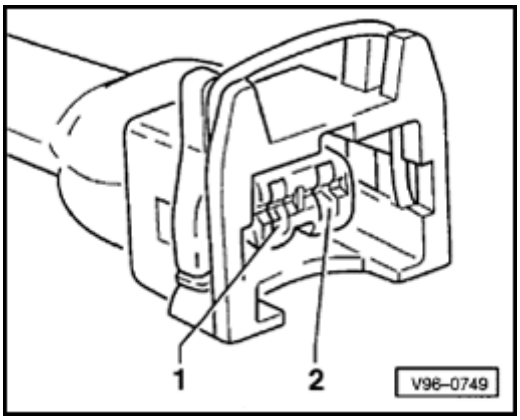

- Test for open circuit and short to positive or Ground in the following wiring connections:

Connector **Contact**	**Test box VAG 1598/31** **Contact**
2	104

- Rectify short circuit or open circuit if necessary.

If the wiring is OK:

- Replace engine control unit.

⇒ *Repair Manual , 1.8 Liter 4-Cyl. 5V Turbo Fuel Injection & Ignition, Engine Code(s): AMU, Repair Group 24; Servicing Motronic injection system; Replacing engine control unit*

21-28

Intake system, checking for leaks u
VAG 1687 Diagnostic Tool

Diagnostic trouble codes (DTCs) related to
trim, charge pressure or mass air flow (MA
may be caused by:

- Leaking (worn/torn) intake hoses during
  conditions
- Incorrectly torqued or improperly placed
  on intake hoses etc. causing leaks durin
  charge conditions

Check the charge air pressure system usin
VAG 1687 Charge air system tester.

**Special tool VAG 1687 Charge air systen
preliminary set-up**

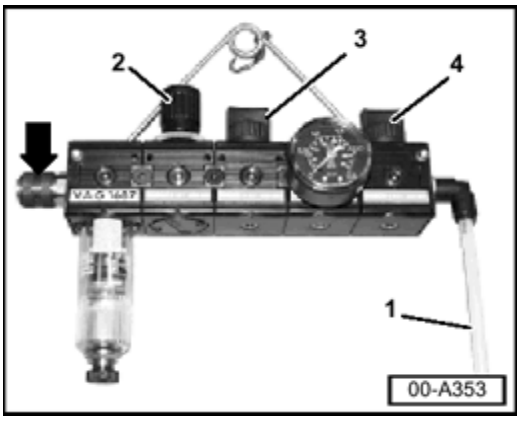

- Back off pressure regulator knob -2- of V
  1687 fully to protect gauge when shop ai
  is applied to assembly.
- Close valve -3- before gauge.
- Close valve -4- after gauge.

The shop air supply line will later be attache
inlet of VAG 1687.

- Remove female fitting from tester (arrow)
  install an appropriate "male" air fitting tha
  connect to your shop air supply line (
  ⇒WARNING!).

21-29

WARNING!

Use only approved air fittings to adapt s air supply line to VAG 1687 tester.

Special tool VAG 1687/1 pressure adapte installing (1.8L Turbo)

- Separate intake hose from Mass Air Flow sensor assembly.

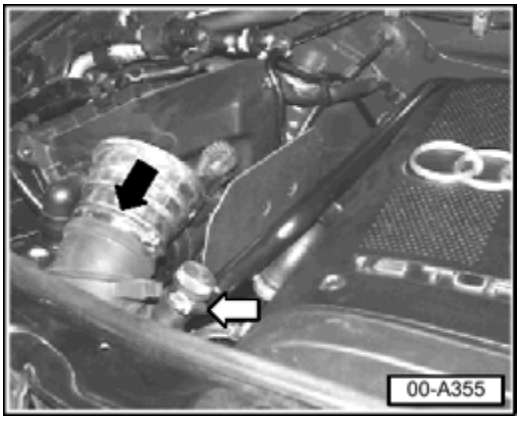

- Insert VAG 1687/1 pressure adapter in in hose -black arrow- using existing clamp (shown).
- Remove crankcase ventilation tube from hose at -white arrow-.

Special tool VAG 1687/1 pressure adapte installing (2.7L BiTurbo)

- Remove upper air cleaner housing and h intake manifold as necessary

⇒ *Repair Manual, Maintenance; Air cleane housing, cleaning; Air cleaner element, repl*

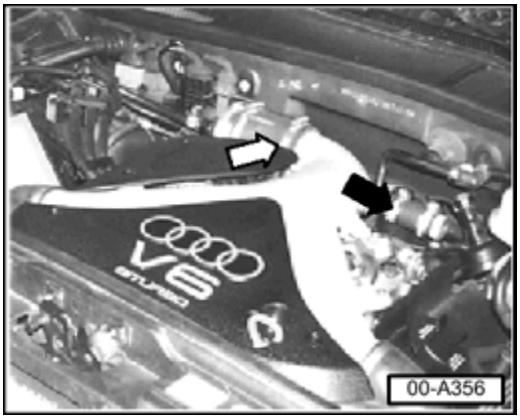

- Insert VAG 1687/1 pressure adapter in in hose -white arrow- using existing clamp (shown).
- Disconnect engine crankcase ventilation from intake manifold -black arrow-.
- Plug intake manifold fitting (for crankcase ventilation hose) with appropriate hose a metal plug using clamps supplied with V 1687/1 special tool kit.

Note:

- *To help find small leaks, BEFORE press the system fill system with smoke using tool KLI9210 and adapter KLI9210/50 as described on ⇒ Page 21-30 .*

- *An ultrasonic detector may also be used detect extremely small leaks where smo not be visible.*

Special tool KLI9210 (Evaporative syster leak detector), connecting to 1.8L Turbo

- Install optional fitting LKI9210/50 on hose special tool KLI9210.

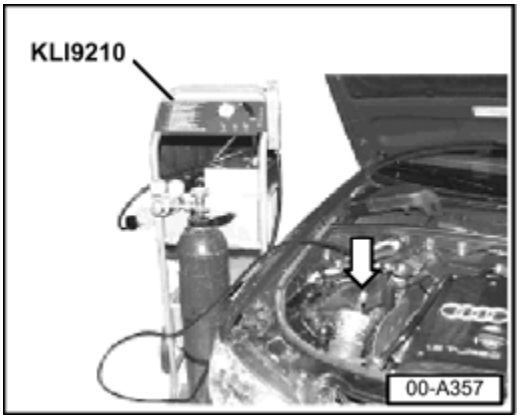

- Connect KLI9210 to VAG 1687/1 adapter (KLI9210 is shown attached to VAG 1687 arrow on 1.8L Turbo).

Special tool KLI9210 (Evaporative syster detector), connecting to 2.7L BiTurbo

- Install optional fitting LKI9210/50 on hose special tool KLI9210.

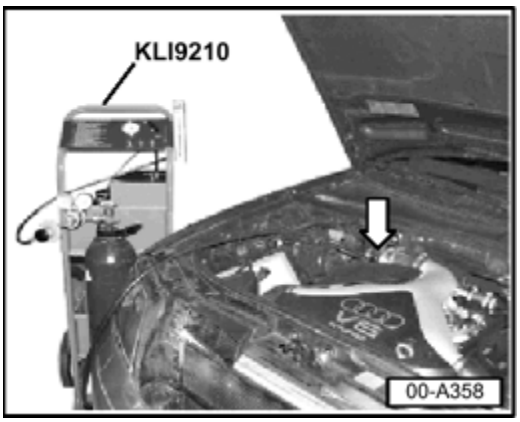

- Connect KLI9210 to VAG 1687/1 adapter (KLI9210 is shown attached to VAG 1687 arrow on 2.7L BiTurbo).

21-31

Special tool KLI9210 (Evaporative syster leak detector), preliminary set-up

- Connect smoke generator leads to vehicl battery.

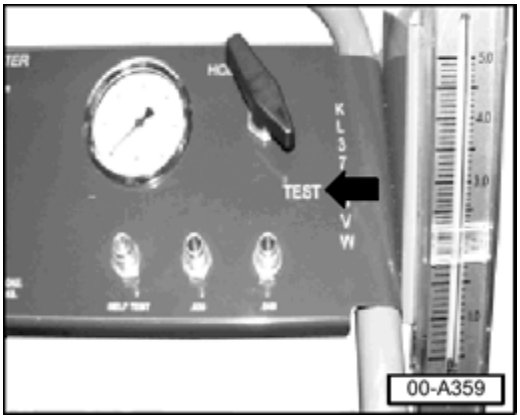

- Turn valve to test -black arrow-.
- Press smoke generator button to fill syste smoke (see instructions printed on tester

With system filled with smoke:

- Remove smoke generator hose and conr VAG1687 quickly to prevent smoke from out (⇒ Page 21-31).

Special tool VAG 1687, connecting to pr adapter VAG 1687/1 (1.8L Turbo)

For illustrations purposes VAG is shown lyi engine compartment. In practice the tool sh hung from the hood.

- Connect VAG 1687 quickly to prevent sm from leaking out.

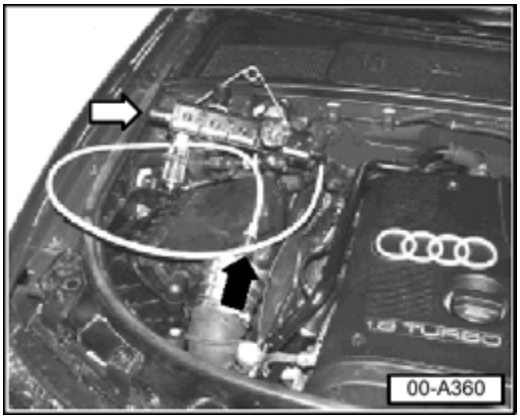

VAG 1687 is shown connected to VAG 168 black arrow-

Shop air supply will be connected to VAG 1 white arrow-

- Perform pressure test (⇒ Page 21-33).

21-32

Special tool VAG 1687, connecting to pressure adapter VAG 1687/1 (2.7L BiTu

For illustrations purposes VAG is shown lyi the engine compartment. In practice the toc should be hung from the hood.

- Connect VAG 1687 quickly to prevent sm from leaking out.

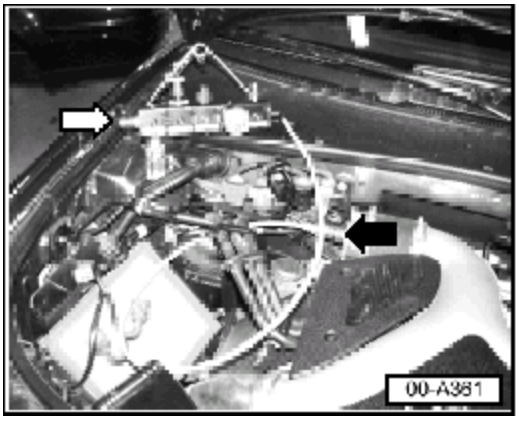

VAG 1687 is shown connected to VAG 168 black arrow-

Shop air supply will be connected to VAG 1 white arrow-

- Perform pressure test (⇒ Page 21-33).

21-33

Performing pressure test:

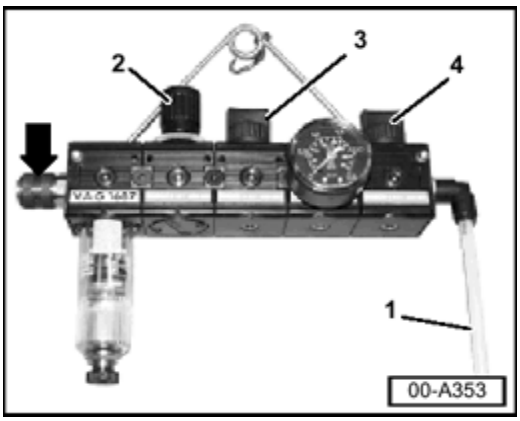

- With outlet hose -1- of VAG 1687 connected to air pressure adapter:
- Attach shop air supply line to previously installed male fitting (⇒ Page 21-28).

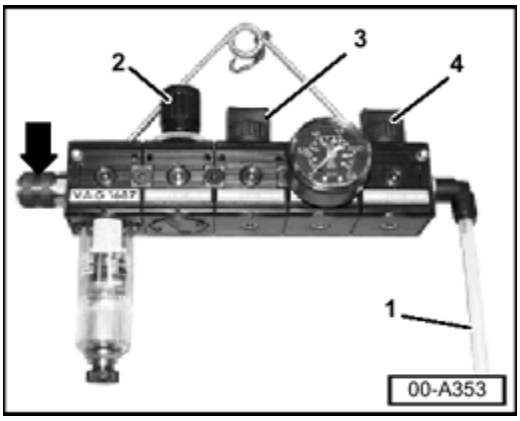

- Open valve -3- between regulator valve and gauge.
- Adjust test pressure up to 0.5 bar (⇒CAUTION below) by turning regulator valve -2-.

CAUTION!

- ***DO NOT pressurize the system above 0.5 bar!***
- ***Doing so may force oil into the intake system which can damage the engine.***

- Slowly open outlet valve -4- (after gauge) to test hose connections.
- Observe pressure gauge for a drop in pressure.

21-34

Note:

Some pressure will be lost past the throttle plate.

- Readjust test pressure to 0.5 bar (⇒CAUTION above) by turning regulator valve -2-.

- Listen for any very large intake leaks.

If smoke generator was used to fill the system with smoke:

- Inspect intake system connections for smoke at leaks.

Note:

An ultrasonic detector may also be used to detect extremely small leaks where smoke may not be visible.

- Repair any leaks found.

- Remove tester.

- Remove plug from crankcase ventilation hose.

- Remove air pressure adapter.

With VAS 5051 diagnostic tool connected:

- Erase DTC memory.

If smoke generator was not used to fill the system with smoke:

- Apply soapy water solution or equivalent to intake system connections.

21-35

Note:

An ultrasonic detector may also be used to detect extremely small leaks.

- Inspect intake system connections for leaks.
- Repair any leaks found.
- Remove tester.
- Remove plug from crankcase ventilation hose.
- Remove air pressure adapter.

With VAS 5051 diagnostic tool connected:

- Erase DTC memory.

21-36

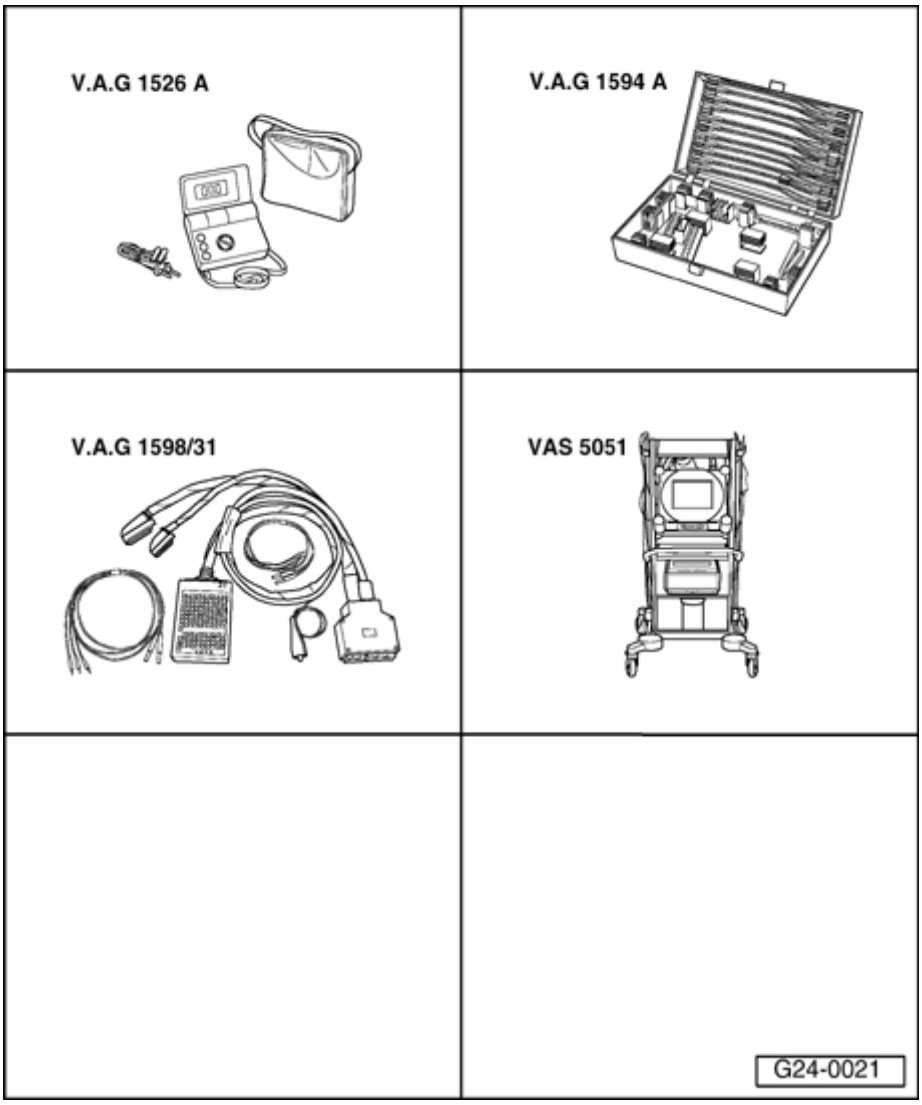

Charge air pressure sensor - G31-, testing

Special tools, testers and other equipment required

- VAG 1526 A
- VAG 1594 A
- VAG 1598/31
- VAS 5051 with VAS 5051/1

- or

- VAG 1551 with VAG 1551/3 A

21-37

Note:

Charge air pressure sensor -G31- and its w are monitored by the engine control unit.

- Connect vehicle diagnostic, testing and information system VAS 5051 (or DTC re VAG 1551) and select engine electronics unit by entering "Address word" 01. Whe this the engine must be running at idling

⇒ *Repair Manual , 1.8 Liter 4-Cyl. 5V Turb Injection & Ignition, Engine Code(s): AMU, Repair Group 01; On Board Diagnostic of Motronic system; Connecting VAS 5051 tes VAG 1551 scan tool and selecting functions*

- Interrogate DTC memory of engine contr unit.

⇒ *Repair Manual , 1.8 Liter 4-Cyl. 5V Turb Injection & Ignition, Engine Code(s): AMU, Repair Group 01; Checking and erasing DT memory*

If the display shows a DTC relating to charg pressure sensor -G31-:

Testing voltage supply

- Disconnect electrical connector on charg pressure sensor.

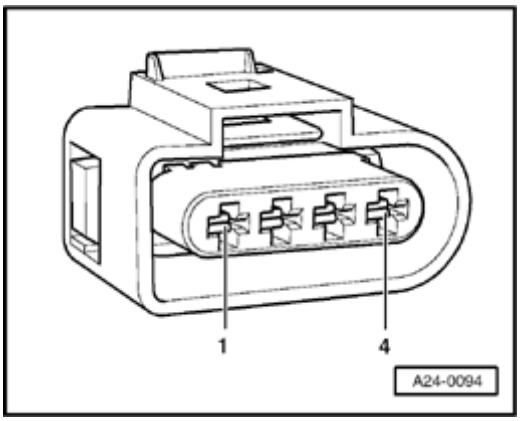

- Connect multimeter (voltage measureme range) between contacts 1 and 3 on con

21-38

- Switch on ignition.

  ♦ Specification: approx. 5 V

If the specification is not attained:

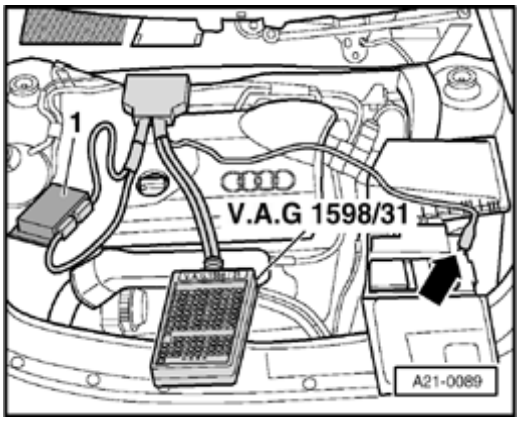

- Connect test box VAG 1598/31 to wiring harness for engine control unit and also to the engine control unit itself (-1-).

⇒ *Repair Manual , 1.8 Liter 4-Cyl. 5V Turbo Fuel Injection & Ignition, Engine Code(s): AMU, Repair Group 24; Servicing Motronic injection system; Wiring and component test using test box VAG 1598/31*

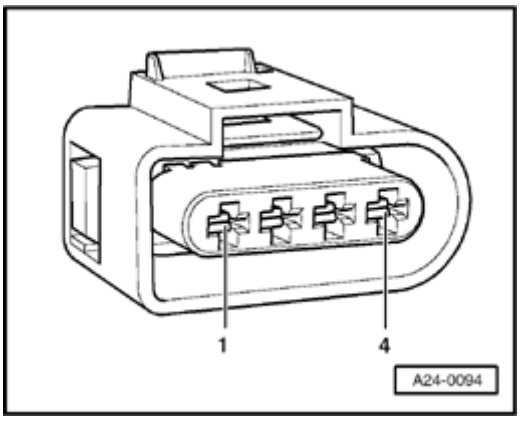

- Test for open circuit and short to positive or Ground in the following wiring connections:

Connector **Contact**	**Test box VAG 1598/31** **Contact**
1	108
3	98

- Rectify short circuit or open circuit if necessary.

If the specification is attained:

21-39

Testing signal wire

- Plug in connector on charge air pressure sensor.

- Connect multimeter (voltage measureme range) between sockets 101 and 108 on box.

- Start engine and run at idling speed.

  - Specification: approx. 1.90 V

- Increase engine speed by operating throt quickly.

  - Specification: 2.00 - 3.00 V

If the specifications are not obtained:

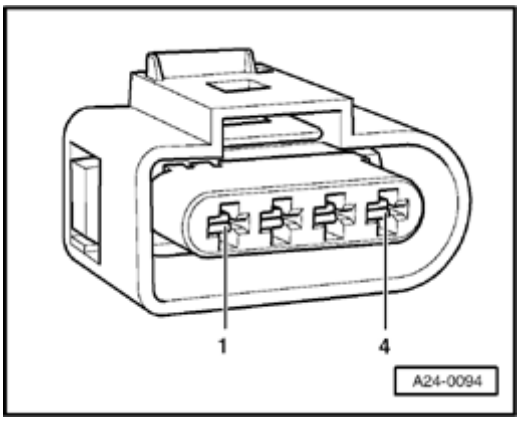

- Test for open circuit and short to positive Ground in the following wiring connectior

Connector Contact	Test box VAG 1598/31 Contact
4	101

- Rectify short circuit or open circuit if nece

If the wiring is OK:

- Replace charge air pressure sensor -G31

21-40

Rules for cleanliness

When working on the exhaust gas turbocharger, pay careful attention to the following "5 rules":

- Thoroughly clean all unions and the adjacent areas before disconnecting.
- Place parts that have been removed on a clean surface and cover. Do not use fluffy cloths!
- Carefully cover opened components or seal, if the repair cannot be carried out immediately.
- Only install clean components: Only unpack replacement parts immediately prior to installation. Do not use parts that have been stored loose (e.g. in tool boxes etc.).
- When the system is open: Do not work with compressed air if this can be avoided. Do not move vehicle unless absolutely necessary.

21-41

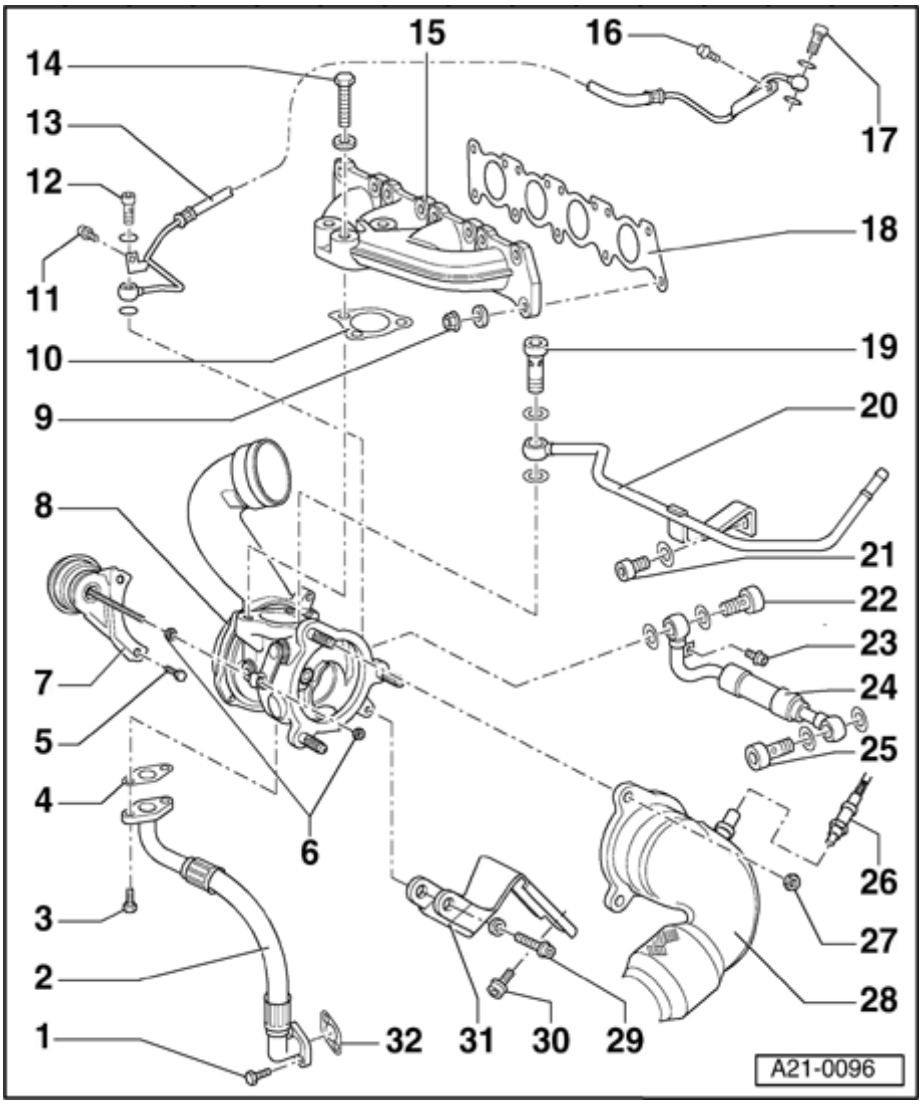

Turbocharge removing and installing: asser overview

Part I

Note:

Replace all gaskets seals

1 - 10 Nm

2 - Oil return lin

- To sump

3 - 10 Nm

- Install with locking fluic 000 600 A2

4 - Gasket

- Replace

5 - 10 Nm

6 - 10 Nm

21-42

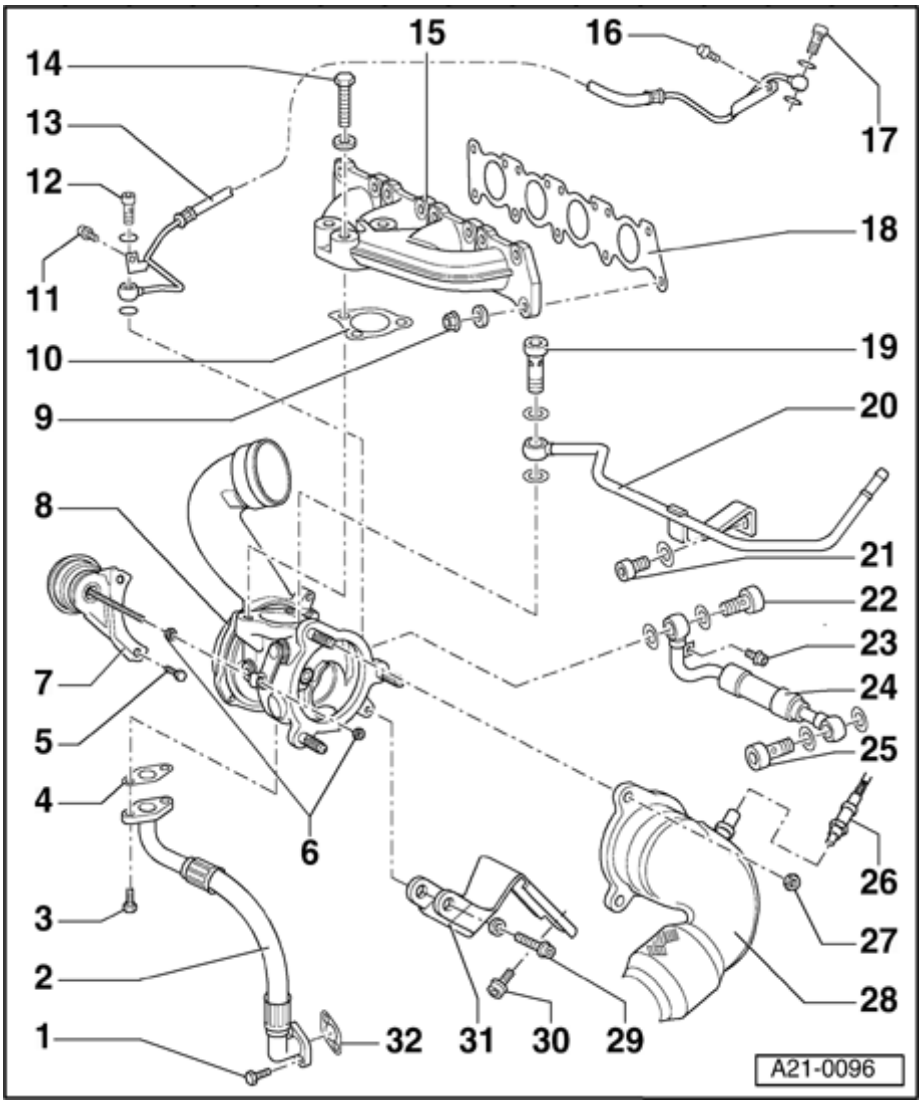

7 - Pressure un

- For Wasteg bypass regulator va

8 - Turbocharge

9 - 25 Nm

- Replace

10 - Gasket

- Replace
- Note installation position

11 - 10 Nm

12 - Banjo bolt - Nm

13 - Oil supply pi

- From oil filt bracket ⇒- 23 -, ⇒ Pag 17-9

14 - 30 Nm

- Replace
- Coat thread and bolt he seating sur with G0005

21-43

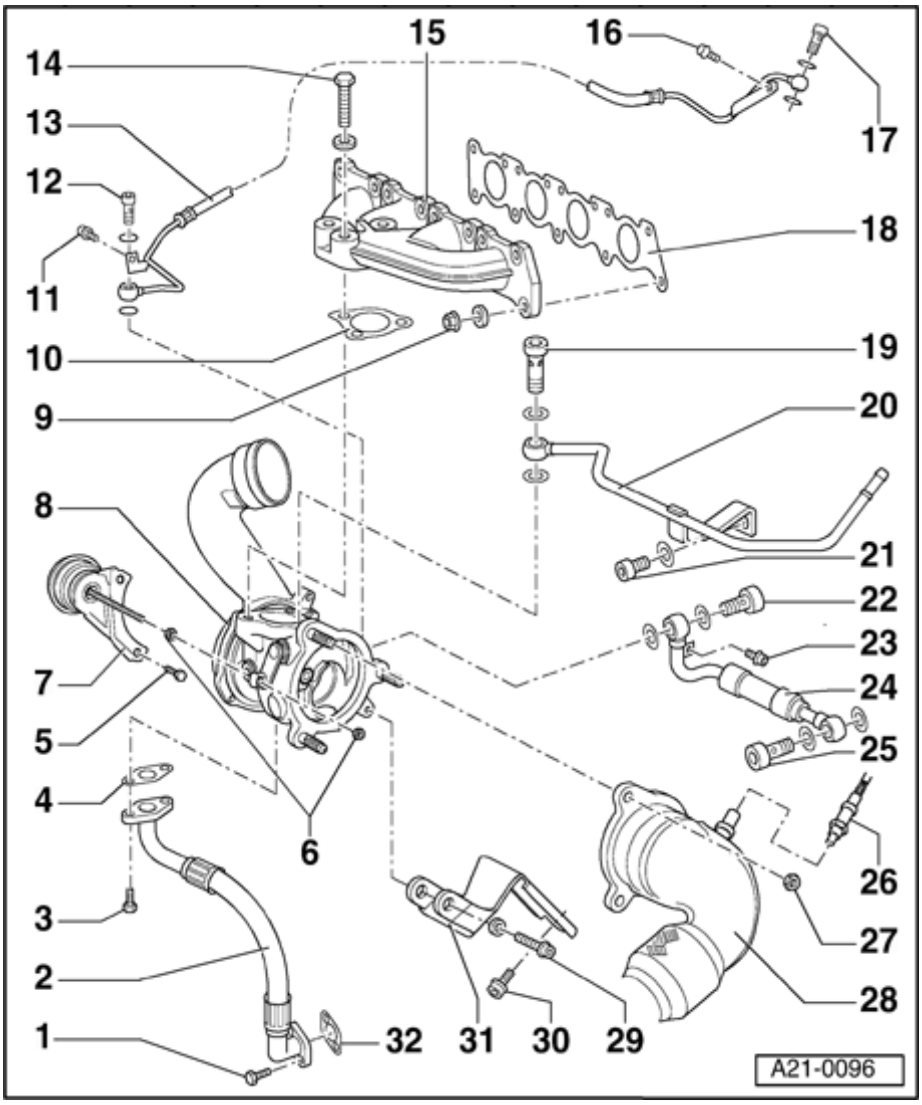

15 - Exhaust manifold

16 - 10 Nm

17 - Banjo bolt - 35 Nm

18 - Gasket

- ♦ Replace

♦ Note installation position

19 - Banjo bolt - 35 Nm

20 - Coolant return pipe

21 - 20 Nm

22 - Banjo bolt - 30 Nm

23 - 10 Nm

24 Coolant - supply hose/line

25 - Banjo bolt - 35 Nm

26 - Oxygen sensor

21-44

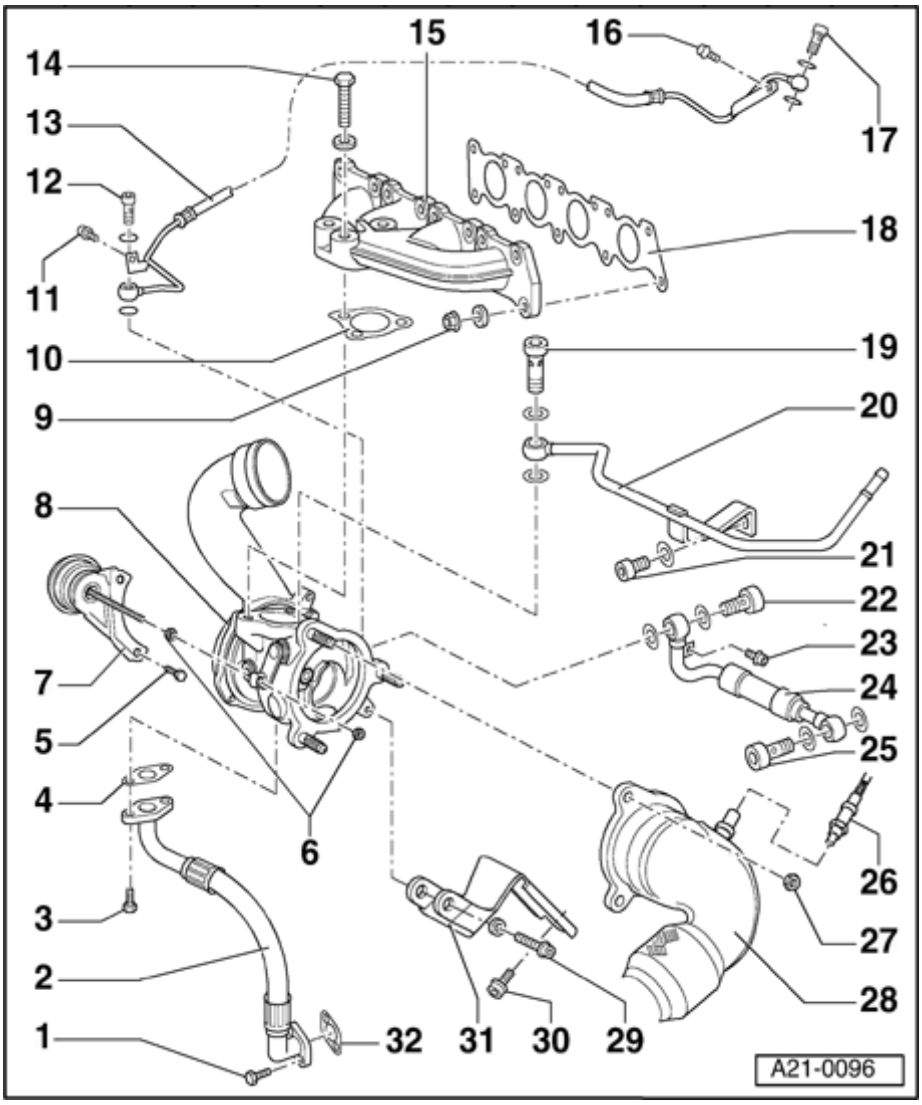

27 - 40 Nm

- Replace

28 - Front exhaus pipe

- With de-coupling element
- Protect fror damage by knocks and impact
- De-couplin element ma only be ber slightly - no more than 10°
- Removing a installing ⇒ Page 26-7

29 - 30 Nm

- Use only genuine bo

⇒ *Parts catalog*

30 - 20 Nm

31 - Bracket

- For ⇦ turbocharger

32 - Gasket

- Replace
- Install with locking fluic 000 600 A2

21-45

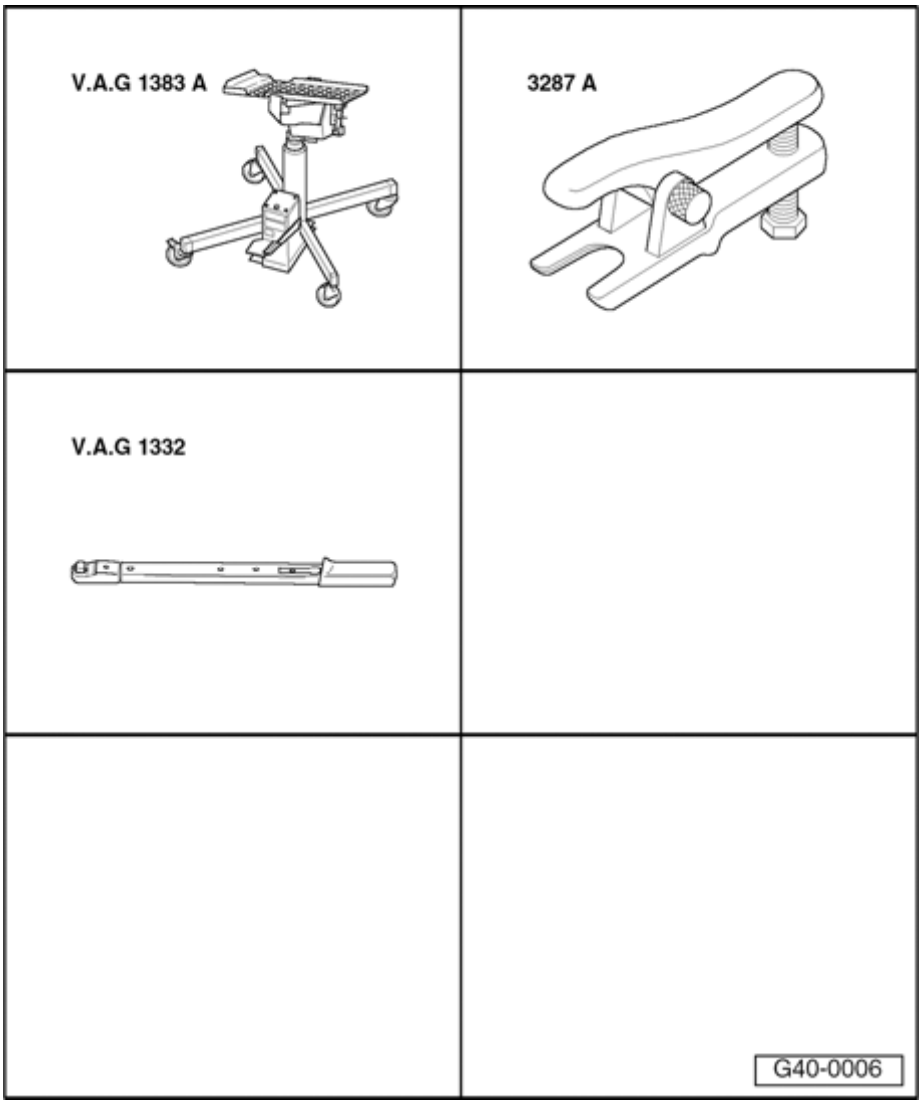

Turbocharge removing and installing

Special tools and miscellaneous equipment require

- VAG 1383 A transmission jac with universal support VAG135
- 3287A Ball joint puller
- VAG 1332 Torq wrench

  40-200 Nm

Removing

Note:

The turbocharger is removed from below.

- Remove engine cover panel (complete).

- Remove both front wheels.

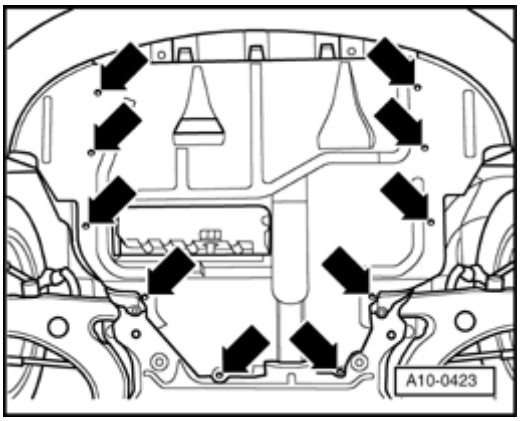

- Remove noise insulation (bottom and right).

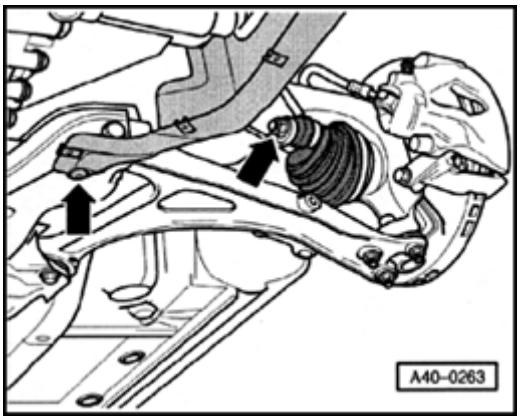

- Remove coupling link nut from anti-roll bar.
- Remove Torx socket bolt for noise insulation (left).

21-47

- Remove upper nut on ball joint.

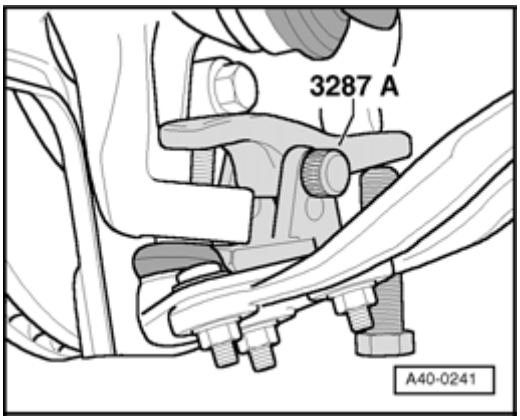

- Install ball joint splitter as shown in illustration and press out ball joint.

Note:

To protect swivel joint threads leave nut on a few turns.

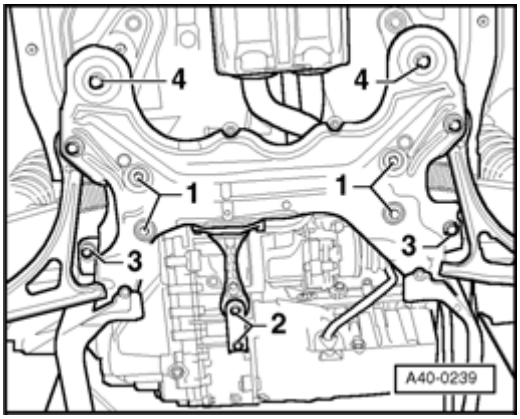

- Remove bolts -1- for steering box and bolts -2- for pendulum support.
- Detach rubber mount for front exhaust pipe.
- Place transmission jack VAG 1383 A with universal support 1359/2 under subframe.
- Remove bolts -3- and -4- for sub-frame.
- Take out subframe carefully.

21-48

- Unbolt heat shield for right-hand drive shaft.

- Remove front exhaust pipe ⇒ Page 26-4 .

Note:

Do not bend the flexible connection (de-coupling element) in the exhaust system more than 10 °, otherwise it may be damaged.

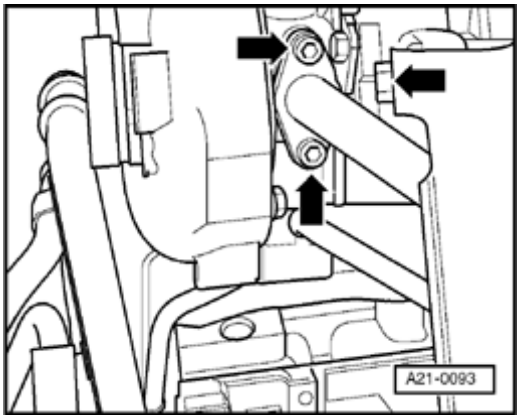

- Unbolt oil return pipe from ⇦ turbocharger ⇨ using a 5 mm hex socket wrench with ball joint.
- Slacken bolt on ⇦ turbocharger ⇨ bracket a few turns, but to not remove bolt.
- Drain cooling system ⇒ Page 19-4

21-49

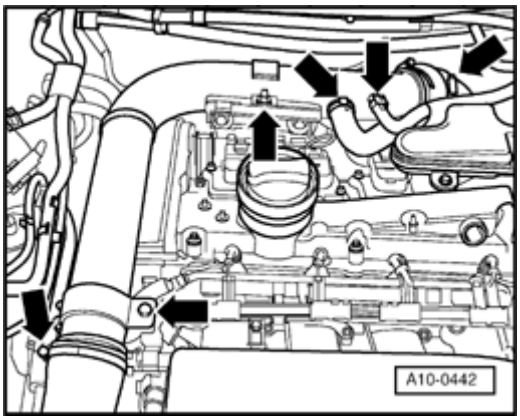

- Remove air intake pipe between ⇦ turbocharger ⇨ and charge air cooler.
- Disconnect secondary air hose -1- from air cleaner housing.

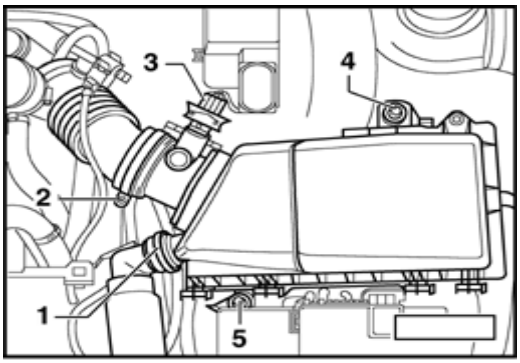

- Detach air intake hose -2- at air mass meter.
- Disconnect electrical connectors for air mass meter -3-.
- Remove bolts -4- and -5- and remove air cleaner housing.

21-50

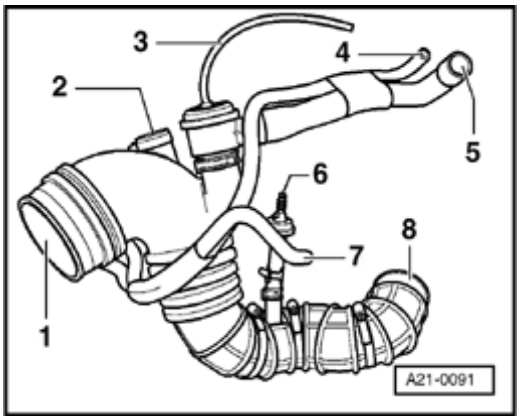

- Detach air intake hose between air cleaner and ⇦ turbocharger ⇨ as follows:
  - Disconnect connector at charge air pressure control solenoid valve -N75-.
  - 1- Connection at air cleaner
  - 2- Detach pressure control valve for crankcase breather -8- from hose.
  - 3- Disconnect vacuum hose for air recirculation valve at connection on cylinder head.
  - 4- Detach hose from charge air pressure control solenoid valve -N75- at air intake pipe.
  - 5- Detach hose from air recirculation valve at air intake pipe.
  - 6- Detach connection to active charcoal filter at non-return valve.
  - 7- Detach connection between charge air pressure control solenoid valve -N75- and pressure unit for charge air pressure control.
  - 8- Detach air intake hose at connection on ⇦ turbocharger ⇨ and remove hose.

21-51

- Unbolt heat shield above exhaust manifold.

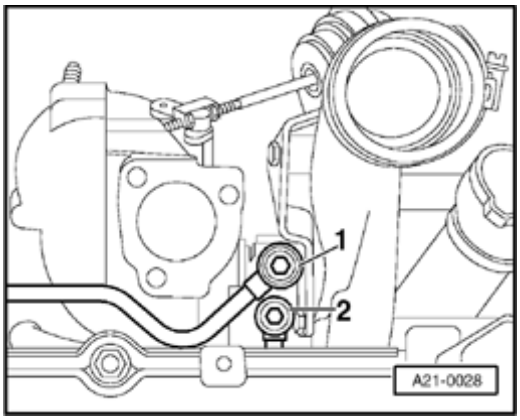

- Disconnect coolant return pipe -1- from ⇦ turbocharger ⇨ using an 8 mm hex socket wrench with ball joint.

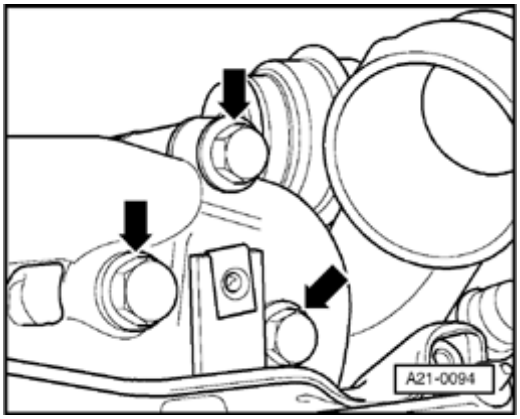

- Unbolt ⇦ turbocharger ⇨ from exhaust manifold.
- Remove gasket between ⇦ turbocharger ⇨ and exhaust manifold and tilt ⇦ turbocharger ⇨ slightly away from engine.

21-52

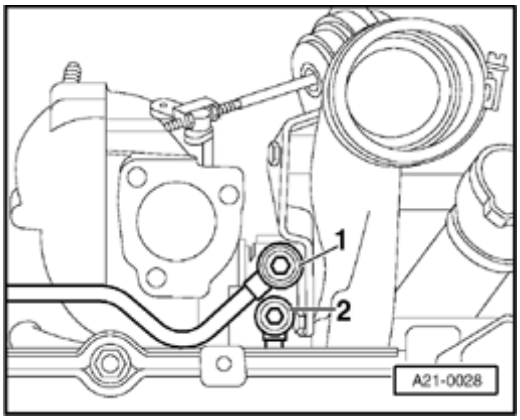

- Disconnect oil supply pipe -2- from ⇦ turbocharger ⇨ using an 8 mm hex socket wrench with ball joint.

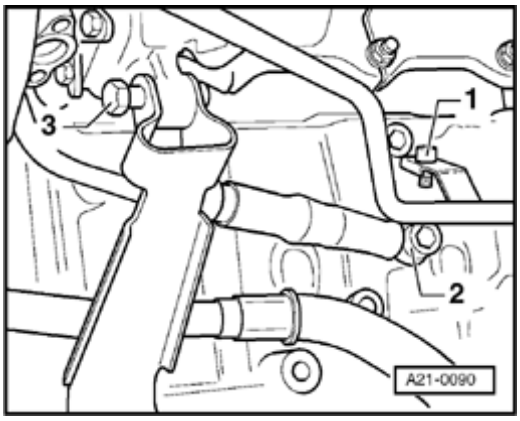

- Disconnect bracket for coolant return line from ⇦ turbocharger ⇨ -1- at crankcase.
- Disconnect coolant supply pipe -2- from crankcase using an 8 mm hex socket wrench with ball joint.
- Remove bolt on ⇦ turbocharger ⇨ bracket completely.
- Lower out ⇦ turbocharger ⇨ with coolant supply line connected.

21-53

Installing:

Note the following points when installing:

- Before installing ⇦ turbocharger ⇨, cor coolant supply line and attach retaining b ⇦ turbocharger ⇨.

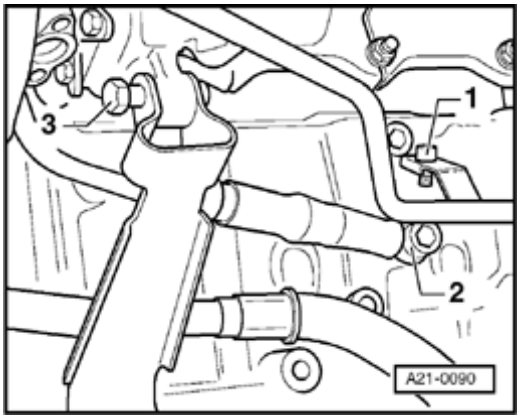

- Guide in ⇦ turbocharger ⇨ from below slide onto bracket. Tighten bolt -3- finger-
- Slide bracket for coolant return line togetl install bolt -1- and tighten to 10 Nm.
- Bolt coolant supply line -2- to crankcase (bolt: 35 Nm; bracket -1-: 10 Nm).

Note:

When tightening connection for coolant sup -2-, make sure line does not turn out of pos ⇦ turbocharger ⇨.

21-54

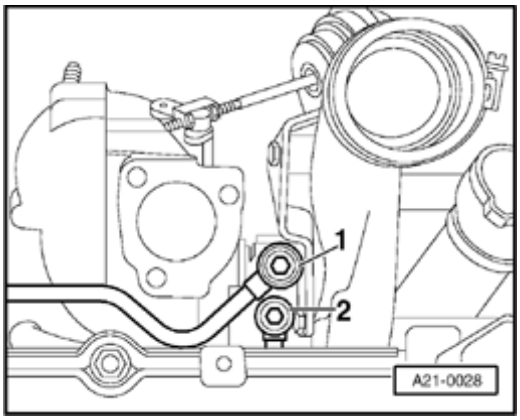

- Attach oil supply line -2- and retaining bar to ⇦ turbocharger ⇨ (banjo bolt: 30 Nm; retaining bar: 10 Nm).
- Slide in gasket between exhaust manifold and ⇦ turbocharger ⇨.

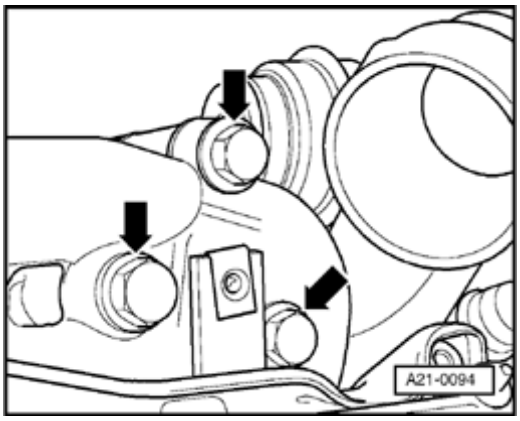

- Bolt ⇦ turbocharger ⇨ to exhaust manifold.

21-55

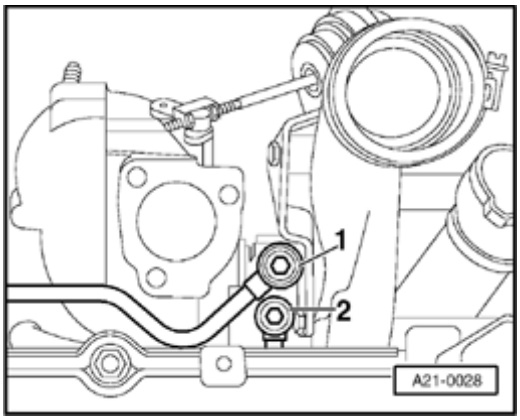

- Connect coolant return line -1- (35 Nm).

Note:

Install front exhaust pipe before installing subframe.

- Tighten all bolts to specified torques indicated in table of tightening torques.
- Fill up with coolant ⇒ Page 19-6 .

Note:

After installing the ⇦ turbocharger ⇨, run engine for approx. 1 minute at idling speed; do not rev. up immediately. This ensures the ⇦ turbocharger ⇨ is properly lubricated.

21-56

Tightening torques

Components	Nm
Oil return line to sump	10
Oil return line to ⇦ turbocharger ⇨	10
Coolant supply line to cylinder block	35
⇦ Turbocharger ⇨ bracket to ⇦ turbocharger ⇨ *	30
⇦ Turbocharger ⇨ bracket to cylinder block	25
Oil supply line to ⇦ turbocharger ⇨	30
Oil supply line retainer piece to ⇦ turbocharger ⇨	10
Coolant return line to ⇦ turbocharger ⇨	35
⇦ Turbocharger ⇨ to exhaust manifold	50
Drive shaft heat shield to cylinder block	35
Nuts on clamp	40

* Use correct bolt (same as original part)

21-57

Before inserting bolts for subframe, position steering gear on subframe and insert bolts.

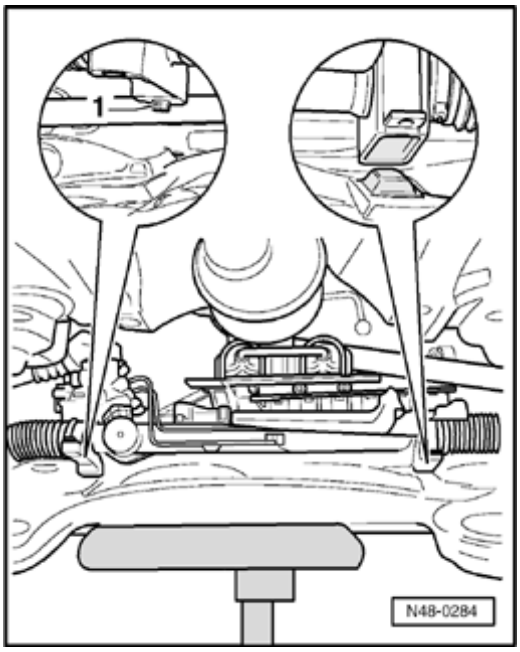

The threaded sleeve -1- must seat in subframe hole.

- Install ball joint in wheel bearing housing.

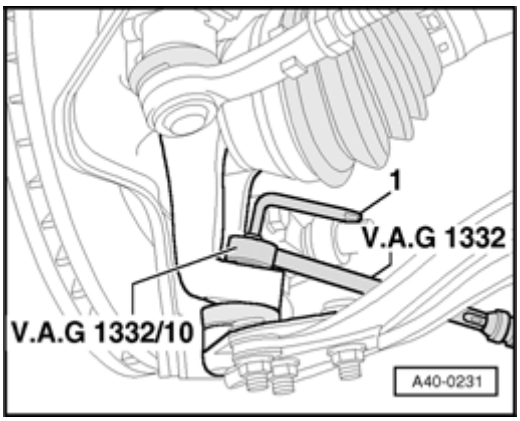

- Screw on new self-locking nut, and counter-hold with T40 Torx key.

Notes:

- *Normal commercially available tools (18 mm ring insert such as Stahlwille 732/10 or Hazet 6630c-18) can also be used instead of VAG 1332/10.*
- *Make sure that protective boot is not damaged or twisted.*

21-58

Tightening torques:

Ball joint to wheel bearing housing	45 Nm
(use new nuts)	
Pendulum support to transmission	
M 10 x 70	50 Nm
M 10 x 30	50 Nm
Pendulum support to subframe	25 Nm
Steering gear to subframe	20 Nm + 90°
(use new bolts)	
Coupling link to anti-roll bar	100 Nm
(use new nuts)	
Subframe to body	100 Nm + 90°
(use new bolts)	

After installing, check position of steering wheel during a test drive.

If steering wheel is not in straight ahead position the front axle tracking must be checked!

21-59

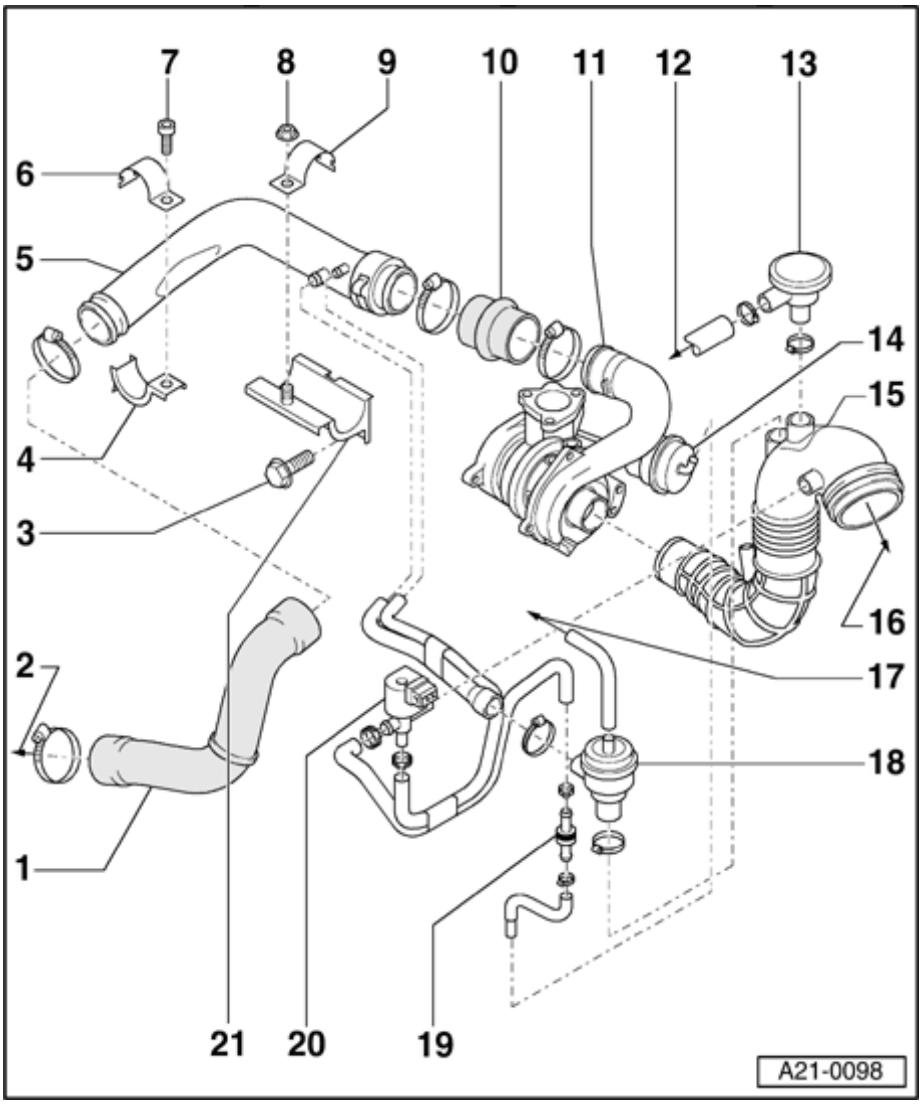

Charge air cooling system components, removing and installing

Part 1

Notes:

- *All hose connections must be secured with hose clips (same as original parts).*

⇒ *Parts List*

- *Before carrying out tests or repair work, make sure that all pipes and hoses are securely connected and that there are no leaks.*

1 - Pressure hose

2 To - connection on charge air cooler

3 - 20 Nm

4 - Bottom bracket for pressure

line

21-60

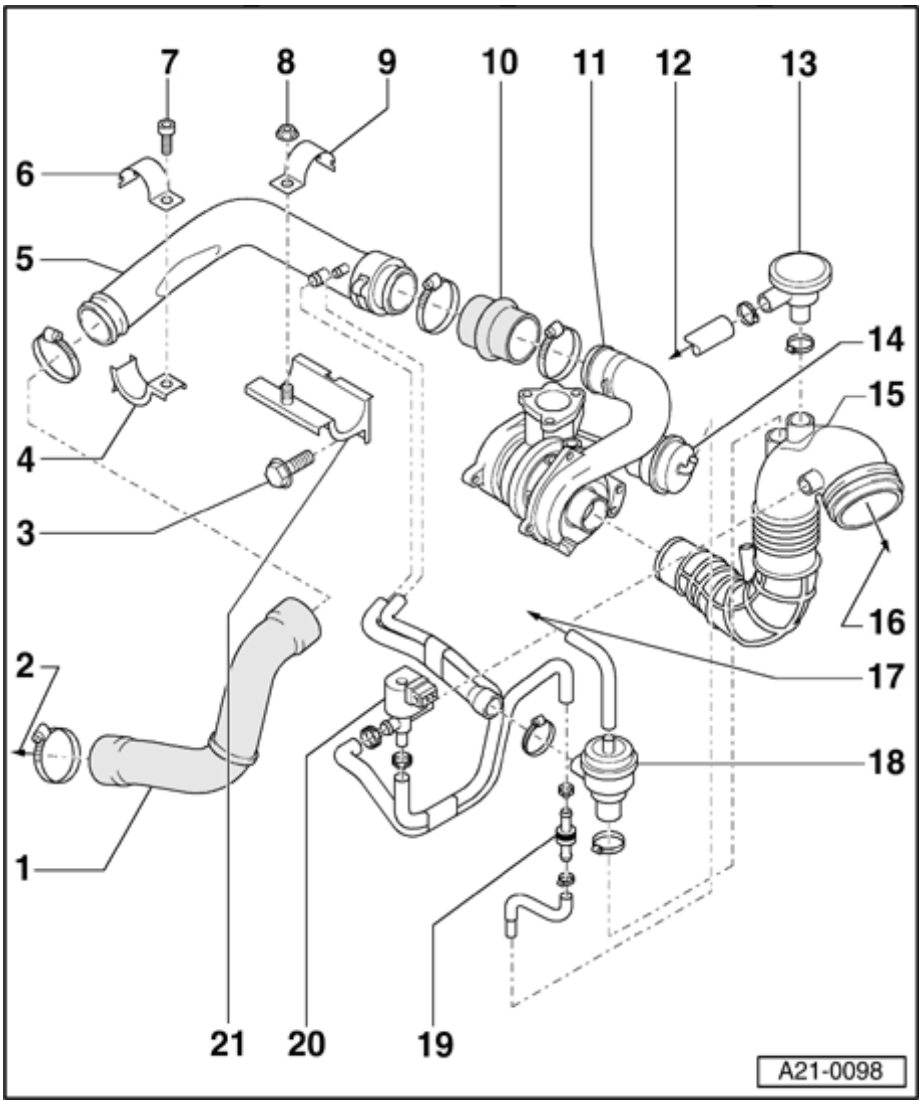

5 - Pressure pip

6 - Top bracket pressure lin

7 - 20 Nm

8 - 20 Nm

9 - Top bracket pressure lin

10 - Pressure ho

11 - Turbocharg

12 - To crankcas breather

13 - Pressure regulating va for crankcas breather

14 - Pressure un charge air pressure co

21-61

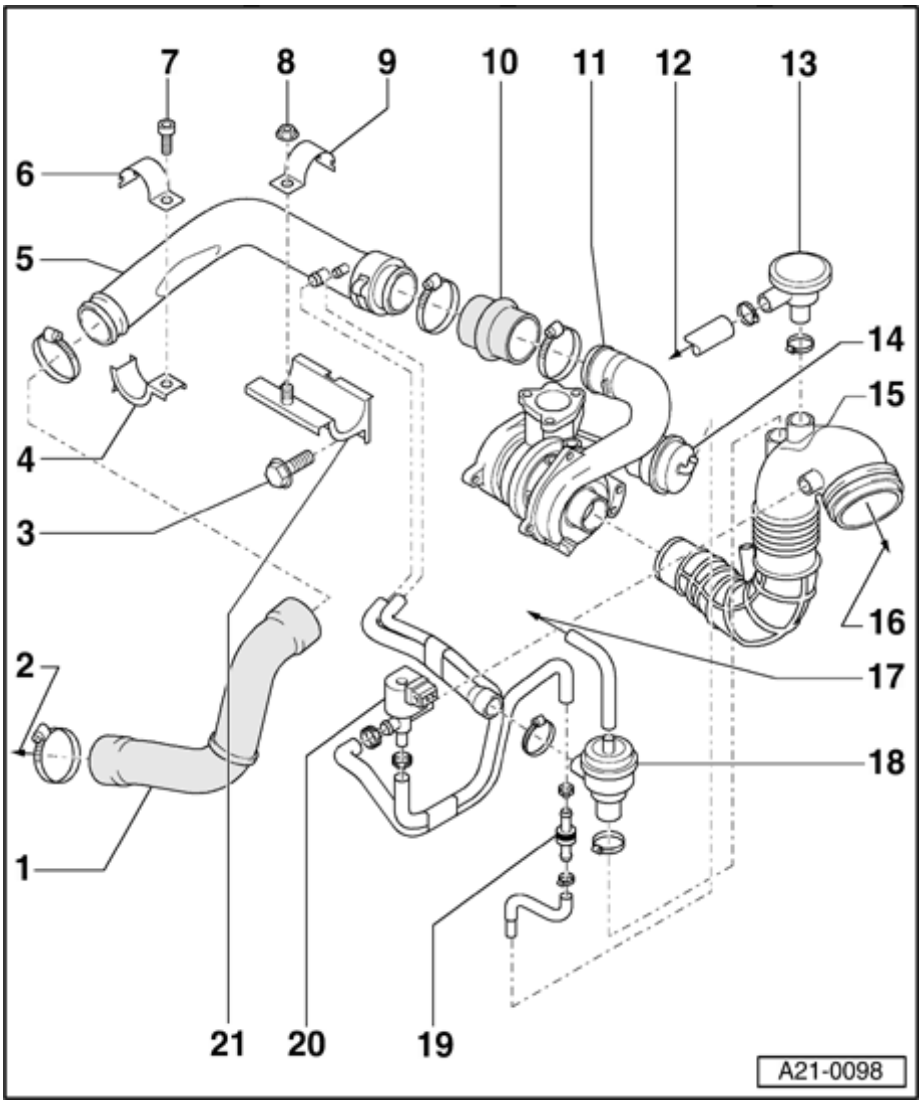

15 - Air intake ho

16 - To air cleane

17 To air recircula - valve for turbocharg -N249-

18 - Charge air pressure byp valve

19 - Connecting piece

20 Air recirculatio - valve for turbocharg -N249-

21 - Bottom brac for pressure

21-62

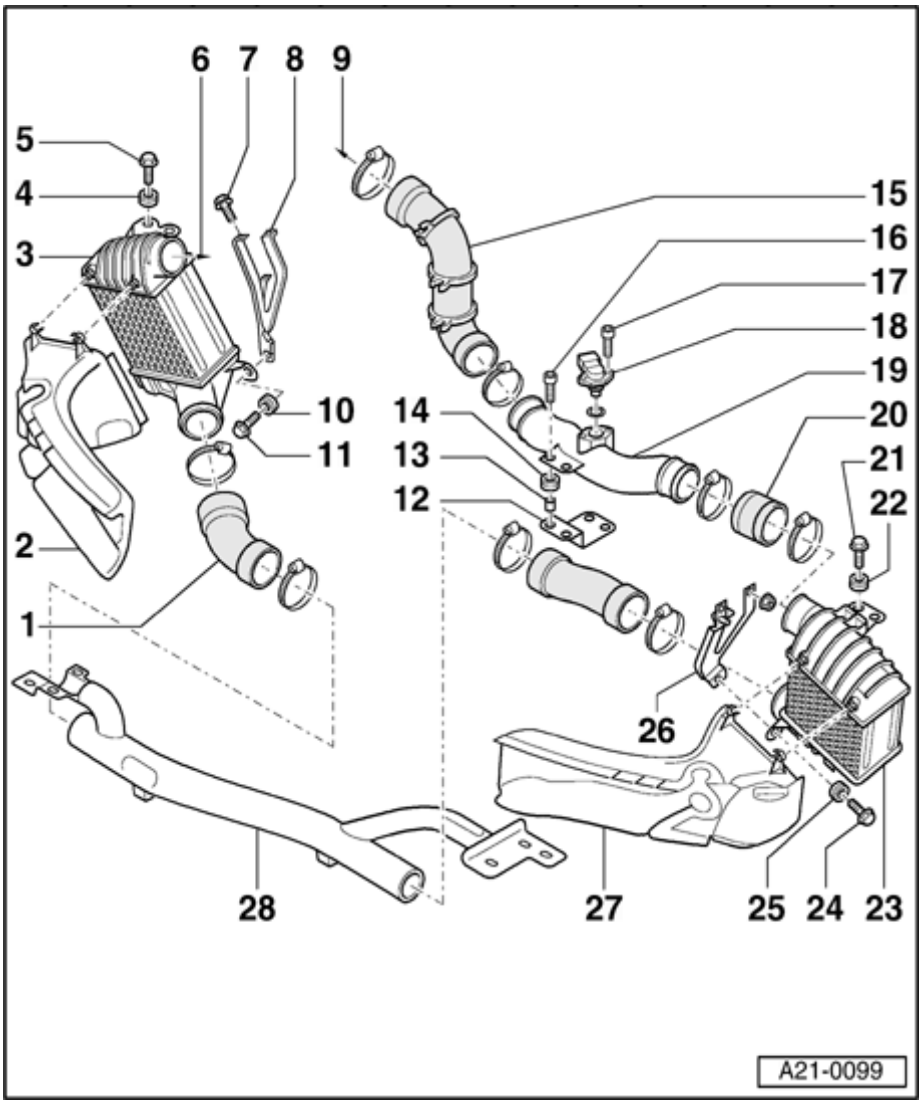

Part 2

1 - Pressure ho

2 - Air duct for charge air cooler (right

3 - Charge air cooler (right

- Removing a installing ⇒ Page 21-65

4 - Rubber grommet

- With sleeve

5 - 10 Nm

6 To
- ⇦ **turbocharge**

7 - 10 Nm

8 - Bracket for charge air cooler (right

9 - Connection intake manif

21-63

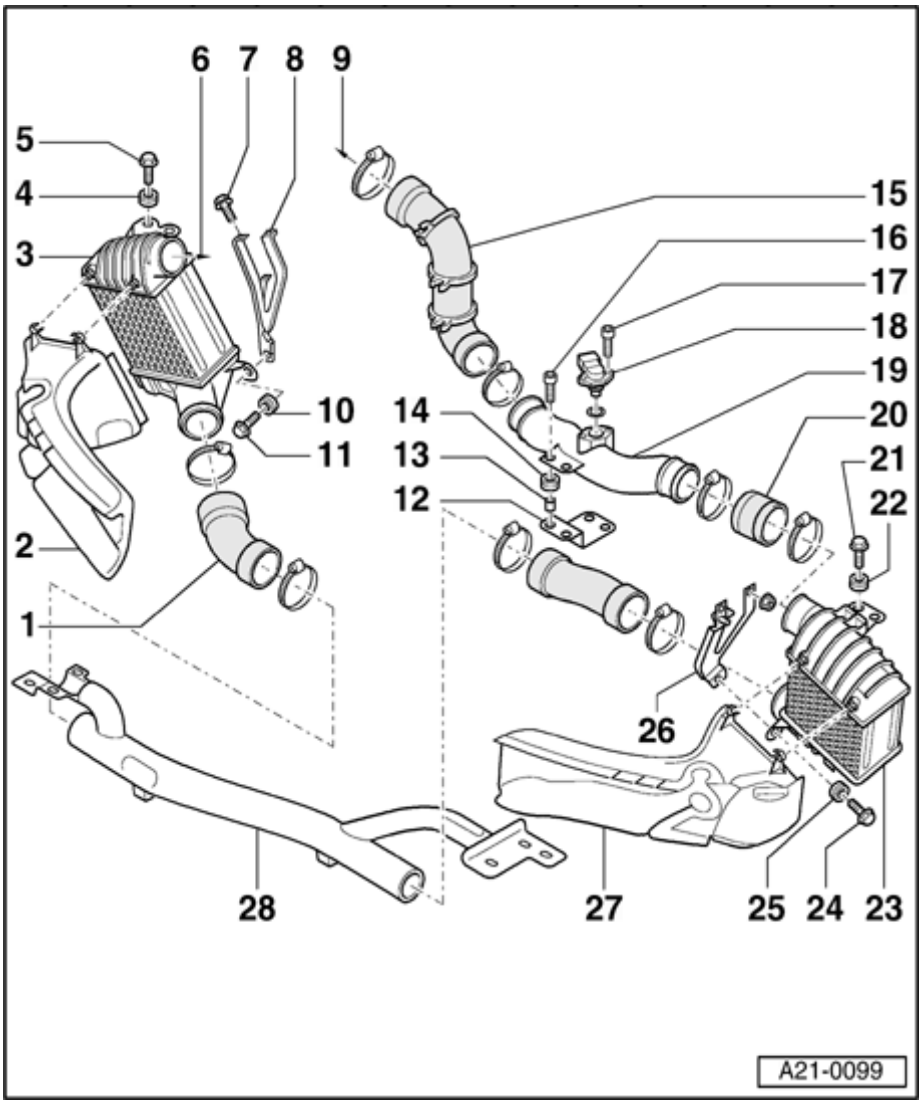

10 - Rubber grommet

- With sleeve

11 - 10 Nm

12 - Bracket

- Secured on longitudinal member

13 - Sleeve

14 - Rubber grommet

15 - Pressure hose

- With clip for wire to charge air pressure sensor - G31-

16 - 10 Nm

17 - 10 Nm

18 - Charge air pressure sensor - G31-

19 - Pressure line

21-64

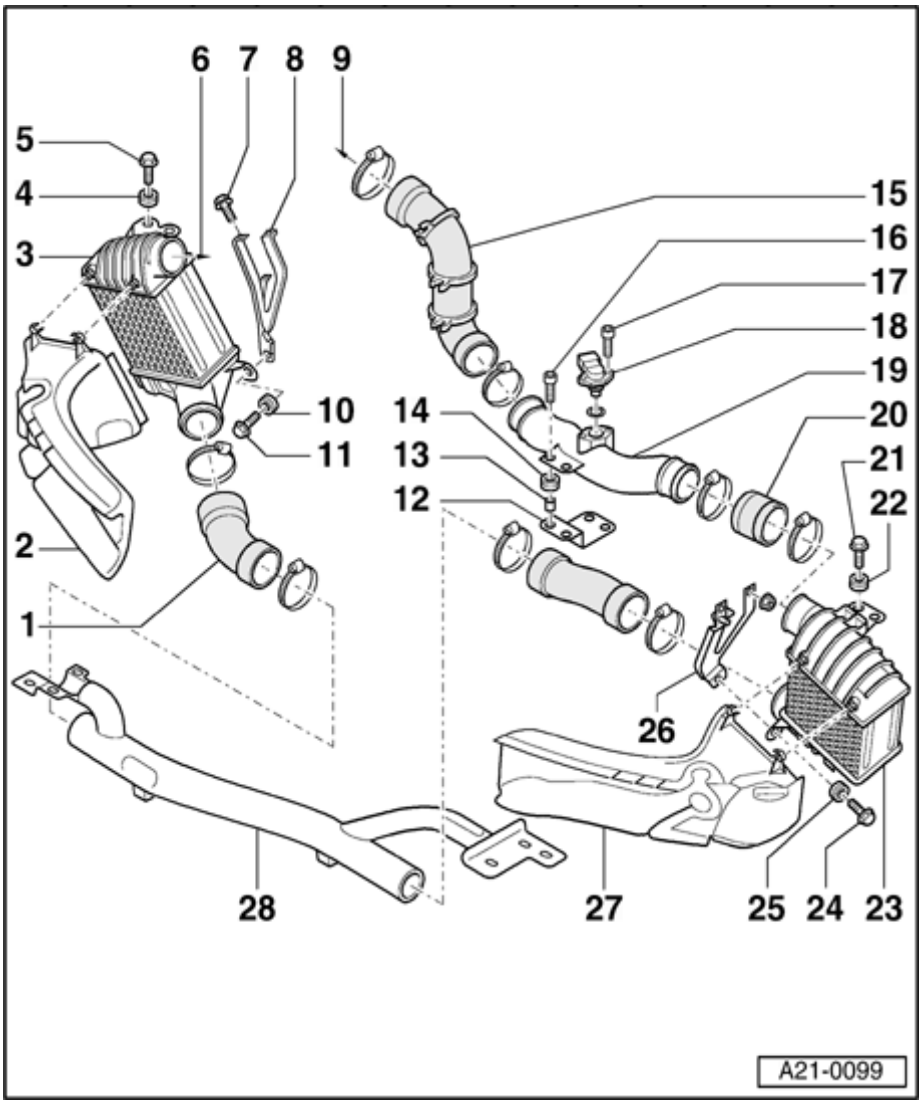

20 - Pressure hose

21 - 10 Nm

22 - Rubber grommet

23 - Charge air cooler (left)

24 - 10 Nm

25 - Rubber grommet

26 - Bracket for charge air cooler

27 - Air duct for charge air cooler (left)

28 - Connecting line between left and right charge air coolers

21-65

Charge air cooler (intercooler), removing and installing

This description applies to the right charge air cooler. The procedure is the same for the left charge air cooler, except that the activated charcoal filter does not have to be removed.

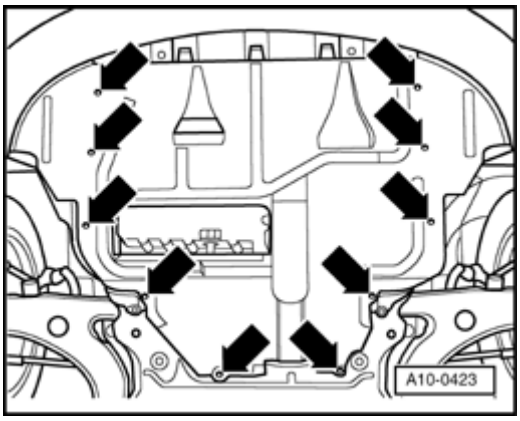

- Remove noise insulation -arrows-.
- Remove front bumper.

⇒ *Repair Manual , Body Exterior, Repair Group 63; Front bumper; Removing and installing*

- Remove right headlight

⇒ *Repair Manual , Electrical Equipment, Repair Group 94; Servicing headlights; Removing and installing headlights*

- Remove activated charcoal filter.

⇒ *Repair Manual , Fuel Supply System, Repair Group 20; Servicing parts of activated charcoal filter system (front-wheel drive and all-wheel drive)*

21-66

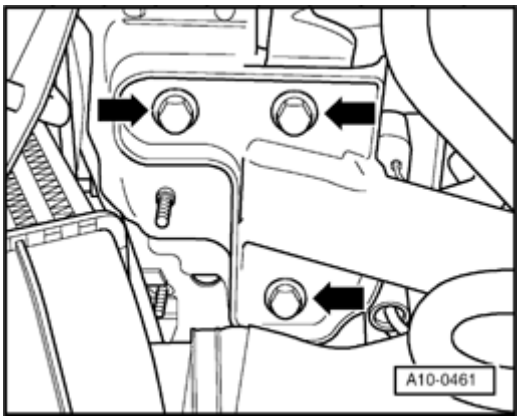

- Unbolt connecting line between charge air coolers from longitudinal members on left side ...

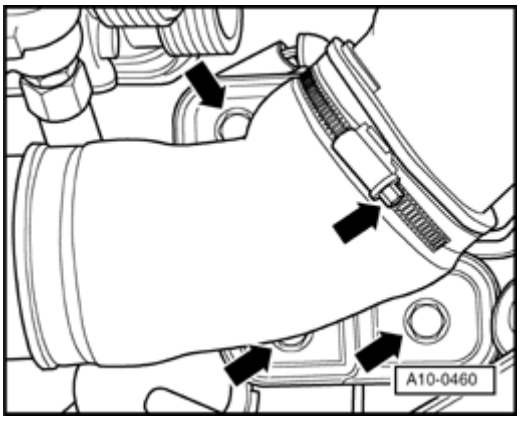

- .... and right side: Disconnect hoses from both charge air coolers.
- Remove connecting line.

21-67

- Disconnect air hose from top of charge a cooler.

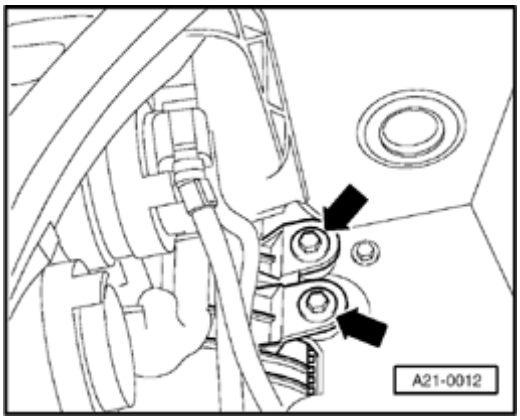

- Remove 2 bolts -arrows- for charge air co
- Unclip air duct from charge air cooler.
- Remove lower securing bolt -1- for charg cooler.
- Take out charge air cooler from underne

Installation is carried out in the reverse orde doing this note the following:

- Adjust headlights.

⇒ *Repair Manual, Maintenance; Descriptio work; Headlights - checking settings and ac if necessary*